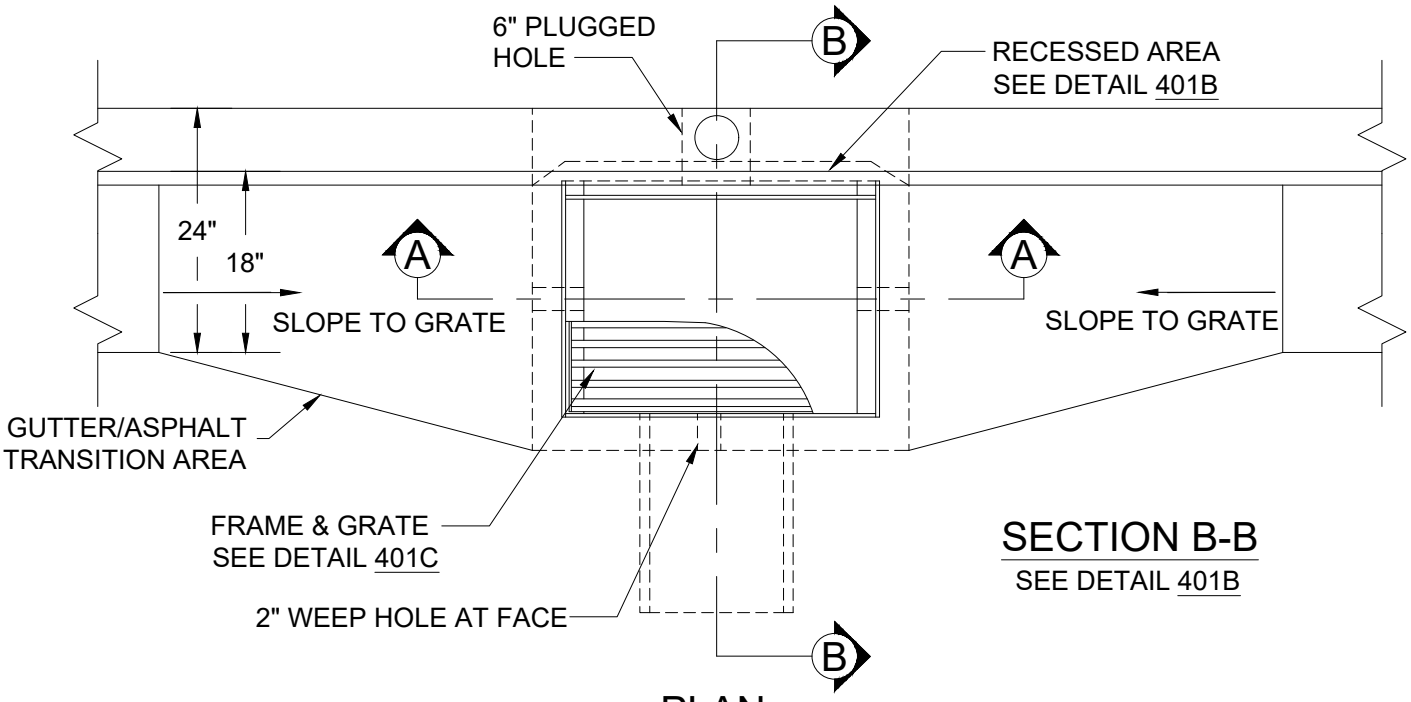

PLAN

SECTION B-B

SEE DETAIL 401B

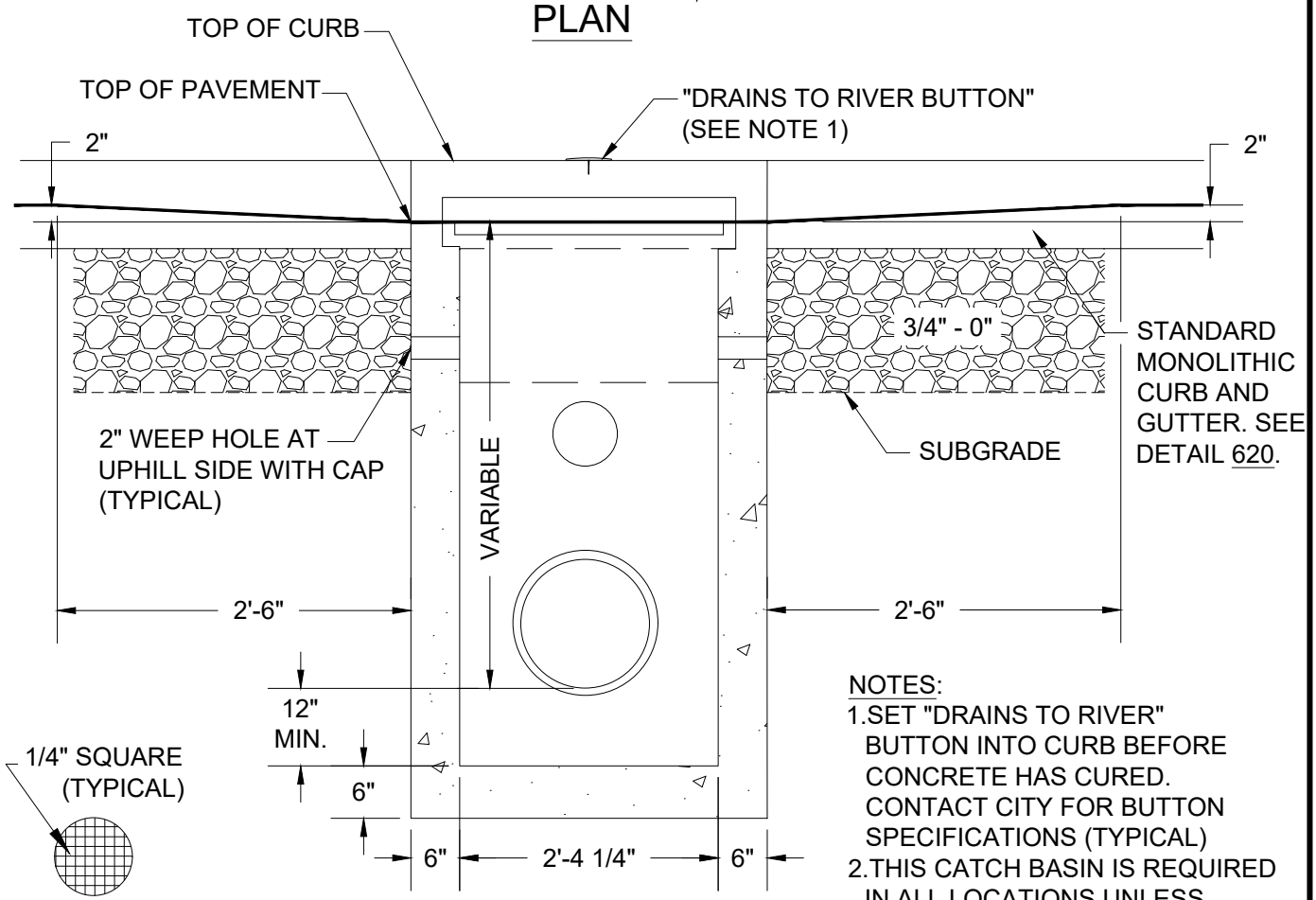

NOTES:

1. SET "DRAINS TO RIVER" BUTTON INTO CURB BEFORE CONCRETE HAS CURED. CONTACT CITY FOR BUTTON SPECIFICATIONS (TYPICAL)
2. THIS CATCH BASIN IS REQUIRED IN ALL LOCATIONS UNLESS OTHERWISE SPECIFIED BY THE ENGINEER

SECTION A-A PROFILE

CITY OF GRESHAM

CATCH BASIN

PWS VERSION: JAN 2020

DRAWN	CMC
REV. DATE	JAN 2019
APPR.	
DETAIL NO.	401A

FILENAME: \\gresham.gov\cog\inter-departmental\development engineering projects\public works standards\2.0 pws revision copy\details\400_stormwater\storm cad\401a.dwg, Plotted 12/6/2019 1:03 PM, By: Anthony Dollowitch, ANSI FULL BLEED A (8.50 X 11.00 INCHES)

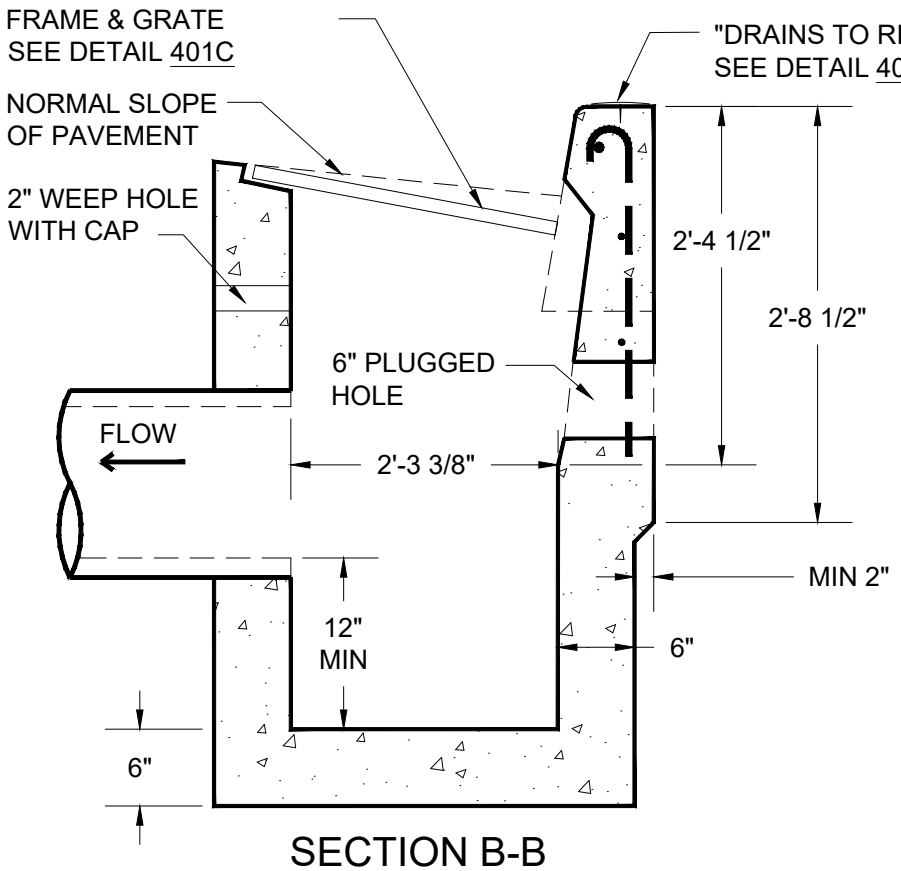

SECTION B-B

NOTES:

1. INSTALL 6" DRAIN PIPE SUCH THAT THE TOP OF PIPE IS 6" BELOW GRATE OR ALIGNED WITH THE CROWN OF THE OUTLET, WHICHEVER IS LOWER.
2. IF CATCH BASIN WILL BE PART OF A DRIVEWAY WING, SLANT THE REBAR CAGE AND INLET FORM TO THE SLOPE OF THE TOP OF CURB IN THE WING WHEN POURING THE CATCH BASIN. MAINTAIN THE "Y2" DIMENSION AND DECREASE THE INLET AS NEEDED.
3. IF THE DISTANCE FROM TOP OF CURB TO THE GRATE IS EQUAL TO OR LESS THAN "Y2" NO CURB INLET IS REQUIRED.
4. #3 AND #5 BARS SHALL BE PLACED DURING CURB CONSTRUCTION.
5. ALL BARS SHALL BE PLACED 1 1/2" CLEAR OF NEAREST FACE OF CONCRETE UNLESS SHOWN OR OTHERWISE NOTED.
6. ALL BAR SPLICE LENGTHS SHALL BE A MIN 20".
7. CONCRETE WITH 3300 PSI STRENGTH AT 28-DAYS SHALL BE USED IN ALL INLET CONSTRUCTION.

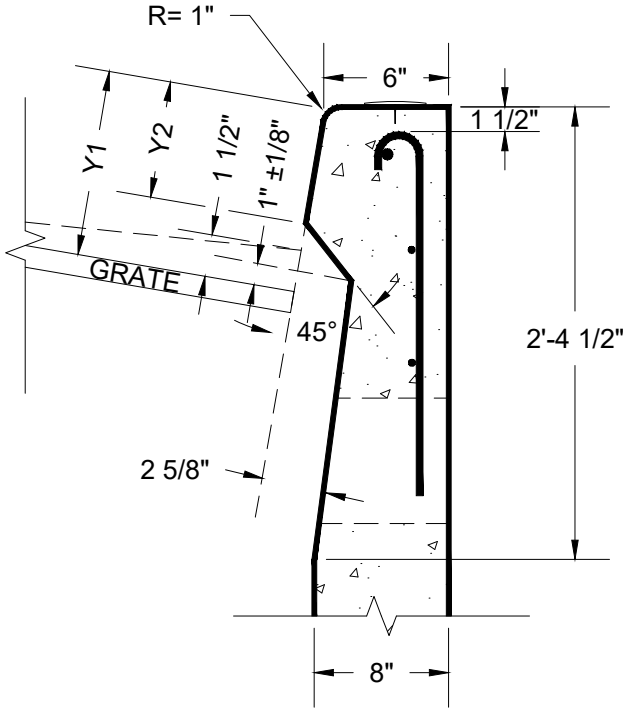

CURB DETAIL AT CATCH BASIN

TABLE 601-C	CURB TYPE	
	TYPE 'C'	MONOLITHIC
Y1	8 1/2"	7 1/2"
Y2	5 3/4"±	4 3/4"±

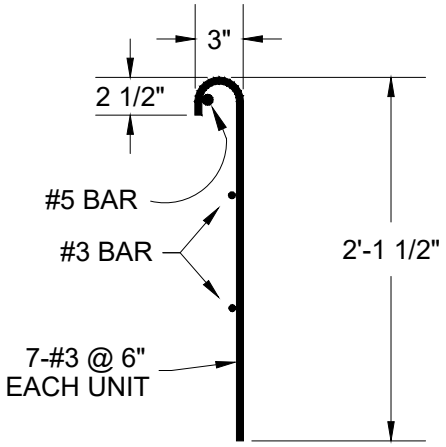

CITY OF GRESHAM

CATCH BASIN SECTION

PWS VERSION: JAN 2020

DRAWN	RMS
REV. DATE	JAN 2019
APPR.	
DETAIL NO.	401B

FILENAME: \\gresham.gov\cog\inter-departmental\development engineering projects\public works standards\2.0 pws revision copy\details\400_stormwater\storm cad\401b.dwg, Plotted 12/6/2019 1:08 PM, By: Anthony Dollowitch, ANSI FULL BLEED A (8.50 X 11.00 INCHES)

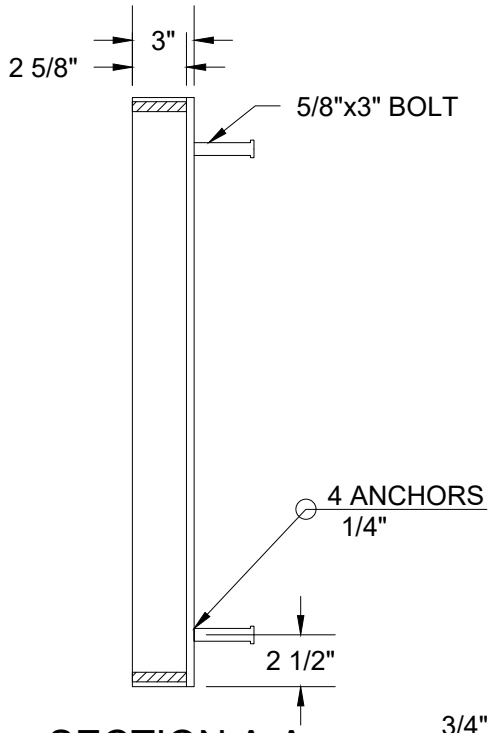

SECTION A-A

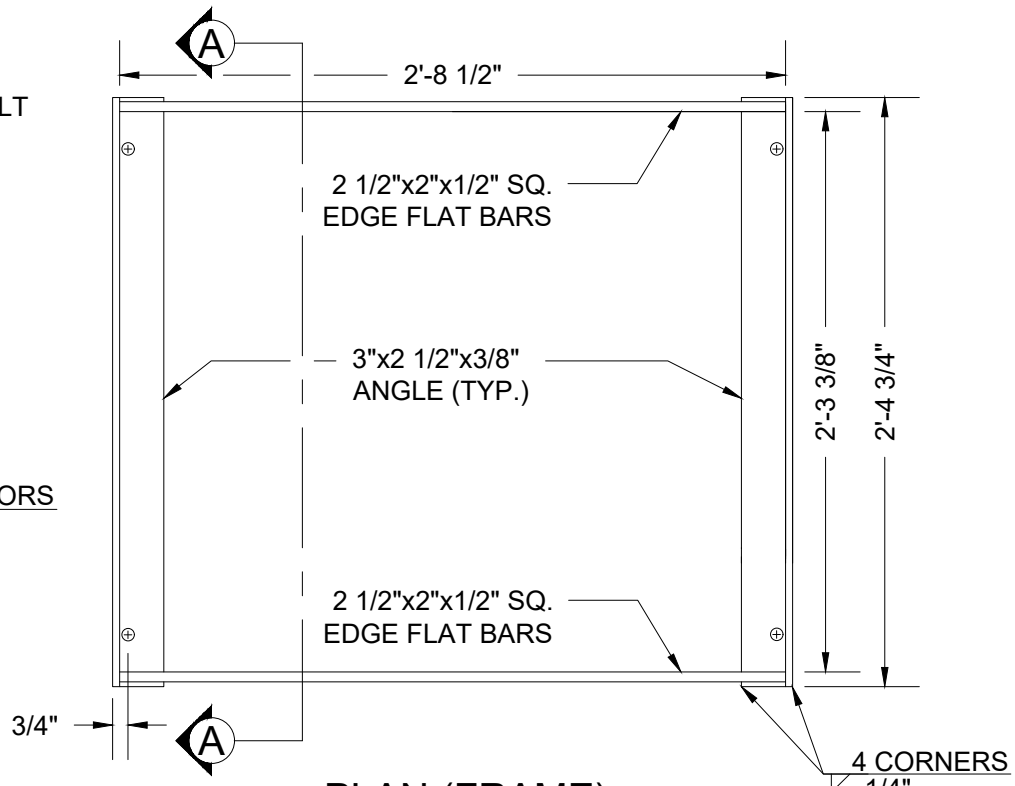

PLAN (FRAME)

NOTE:
USE VERTICAL BEADS IN CORNERS, FILLET WELD JOINT ON BOTTOM OF FRAME. GRATE MUST REST FLAT ON FRAME SURFACE.

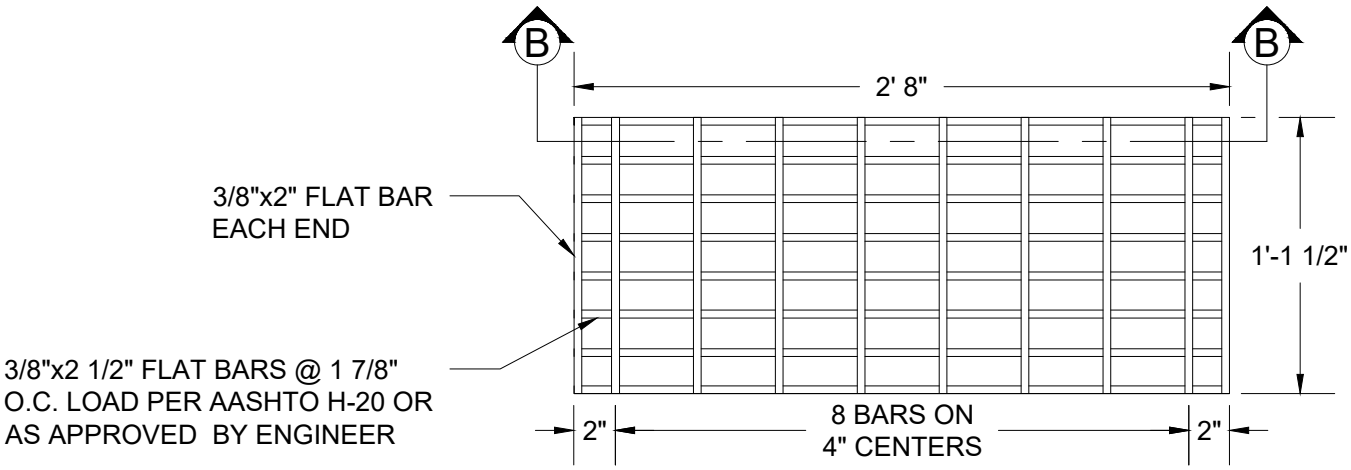

PLAN (GRATE)

TWO GRATES REQUIRED

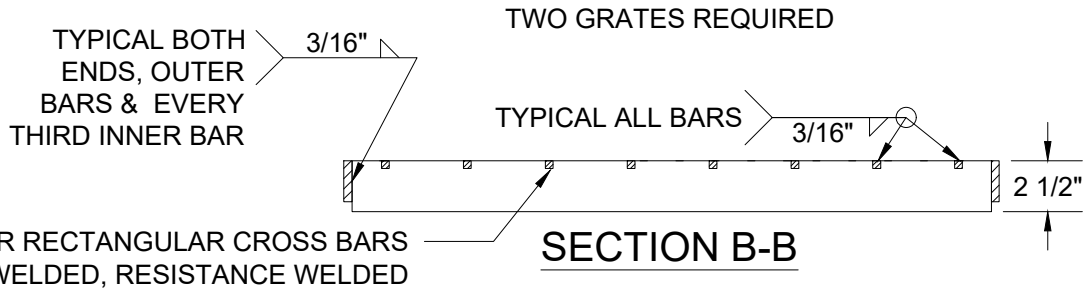

SECTION B-B

CITY OF GRESHAM

CATCH BASIN FRAME AND GRATE

PWS VERSION: JAN 2020

DRAWN	CMC
REV. DATE	JAN 2019
APPR.	
DETAIL NO.	401C

FILENAME: \\gresham.gov\cog\inter-departmental\development engineering projects\public works standards\2.0 pws revision copy\details\400_stormwater\storm cad\401c.dwg, Plotted 12/6/2019 1:21 PM, By: Anthony Dollowitch, ANSI FULL BLEED A (8.50 X 11.00 INCHES)

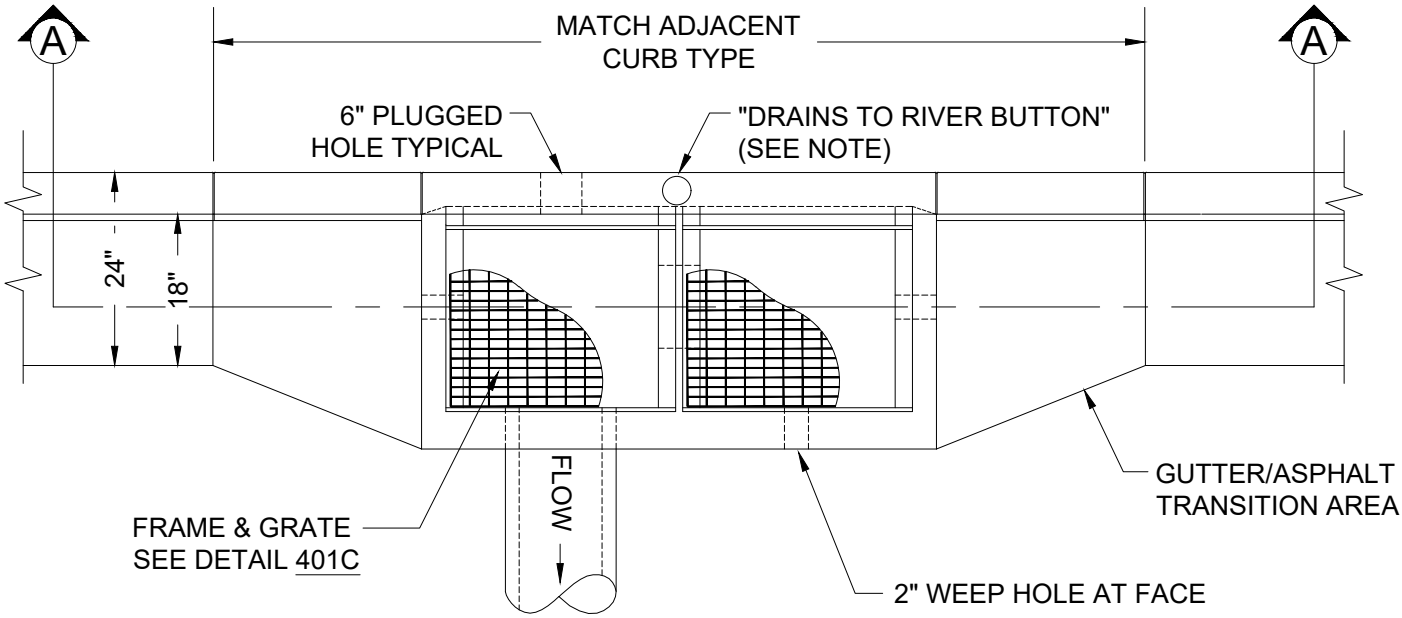

PLAN

NOTE:
SET "DRAINS TO RIVER" BUTTON INTO CURB BEFORE CONCRETE HAS CURED. CONTACT CITY FOR BUTTON SPECIFICATIONS (TYPICAL)

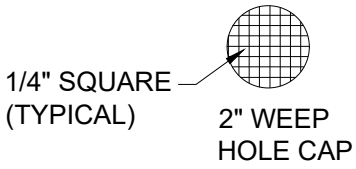

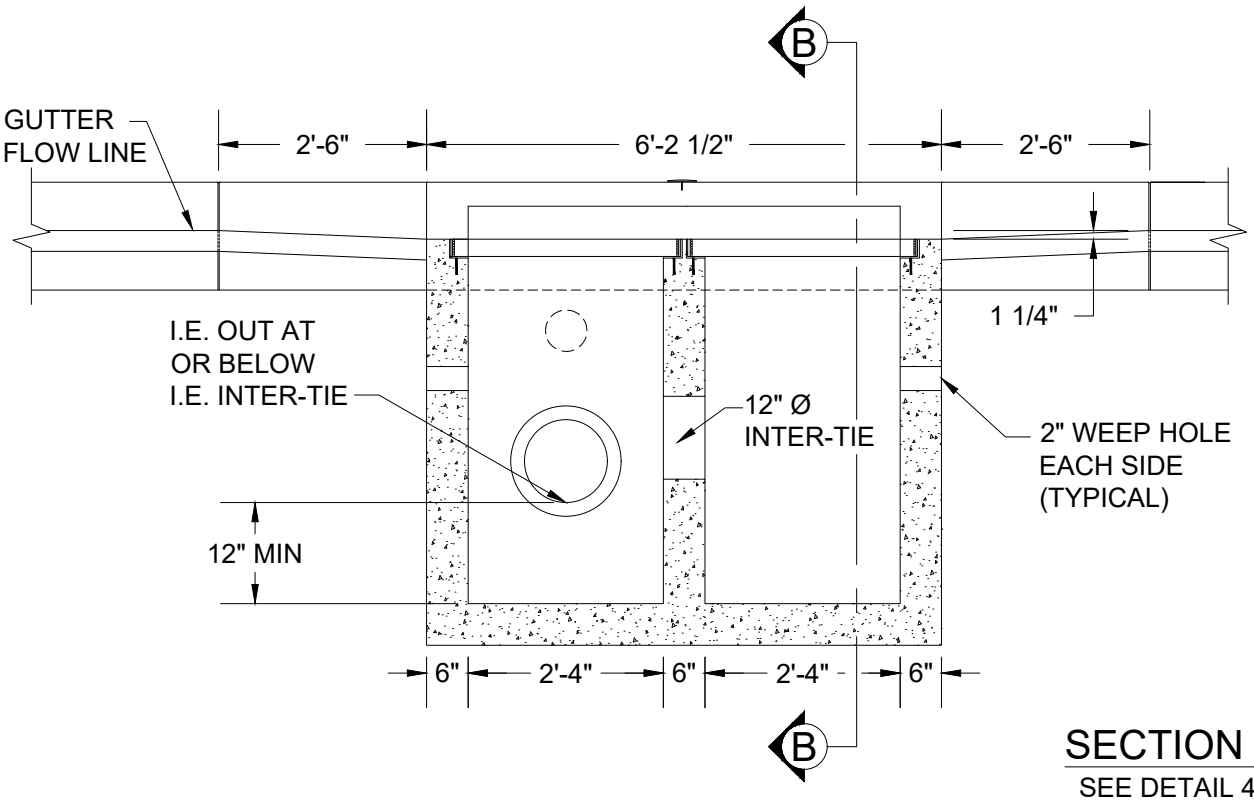

SECTION B-B

SEE DETAIL 401B

SECTION A-A

CITY OF GRESHAM

DOUBLE CATCH BASIN

PWS VERSION: JAN 2020

DRAWN	CMC
REV. DATE	JAN 2019
APPR.	
DETAIL NO.	401D

FILENAME: \\gresham.gov\cog\inter-departmental\development engineering projects\public works standards\2.0 pws revision copy\details\400_stormwater\storm cad\401d.dwg, Plotted 12/6/2019 1:25 PM, By: Anthony Dollowitch, ANSI FULL BLEED A (8.50 X 11.00 INCHES)

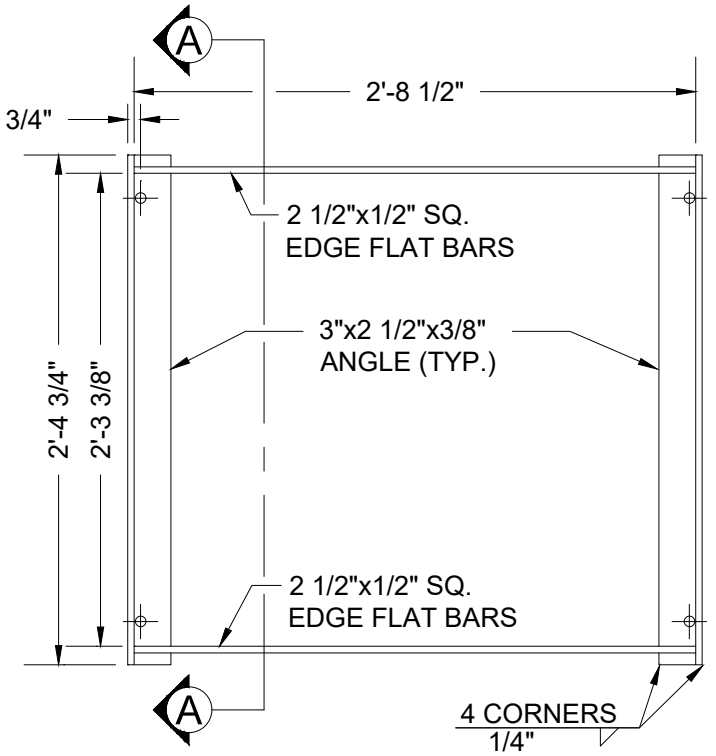

PLAN (FRAME)

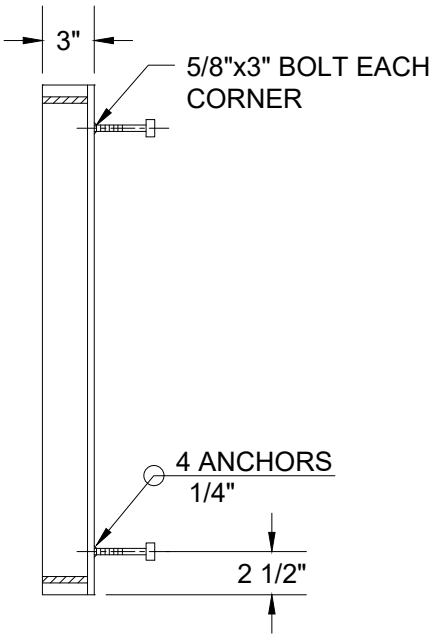

SECTION A-A

NOTE:
USE VERTICAL BEADS IN CORNERS, FILLET WELD JOINT ON BOTTOM OF FRAME. GRATE MUST REST FLAT ON FRAME SURFACE. BAR SIZE PER AASHTO LOAD REQUIREMENTS AND AS APPROVED BY ENGINEER.

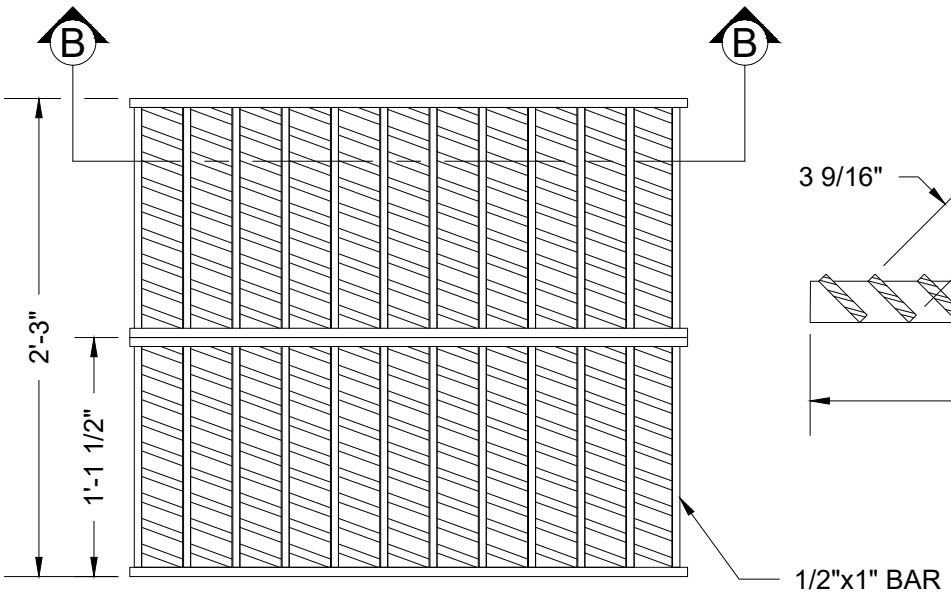

PLAN (GRATES)

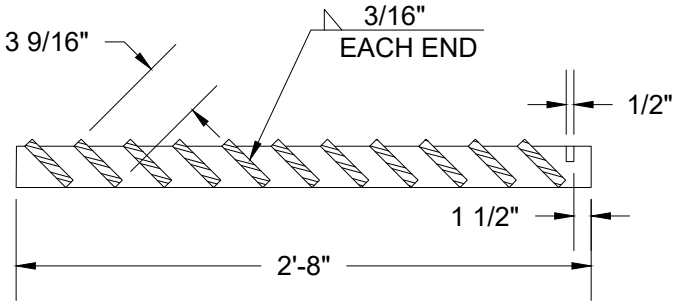

SECTION B-B

NOTE:
THIS GRATE MAY BE REQUIRED IN HILLSIDE AREAS OR WHERE STREET SLOPES EXCEED 5 PERCENT GRADE, OR WHERE THE CATCH BASIN FRAME AND GRATE (STANDARD DETAIL 401C) IS NOT CAPABLE OF INTERCEPTING COMPLETELY THE DESIGN STORM FLOW AT THE CURB.

CITY OF GRESHAM

CATCH BASIN WITH P-45 GRATE

PWS VERSION: JAN 2020

DRAWN	CMC
REV. DATE	JAN 2019
APPR.	
DETAIL NO.	401E

FILENAME: \\gresham.gov\cog\inter-departmental\development engineering projects\public works standards\2.0 pws revision copy\details\400_stormwater\storm cad\401e.dwg, Plotted 12/6/2019 1:28 PM, By: Anthony Dollowitch, ANSI FULL BLEED A (8.50 X 11.00 INCHES)

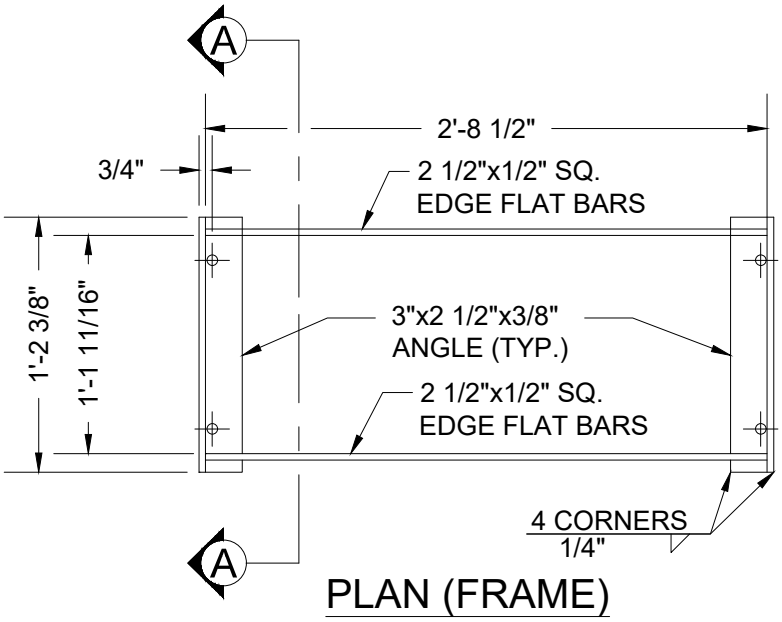

PLAN (FRAME)

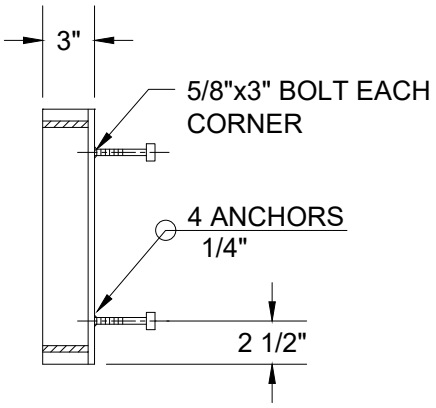

SECTION A-A

NOTE:
USE VERTICAL BEADS IN CORNERS, FILLET WELD JOINT ON BOTTOM OF FRAME. GRATE MUST REST FLAT ON FRAME SURFACE. BAR SIZE PER AASHTO LOAD REQUIREMENTS AND AS APPROVED BY ENGINEER.

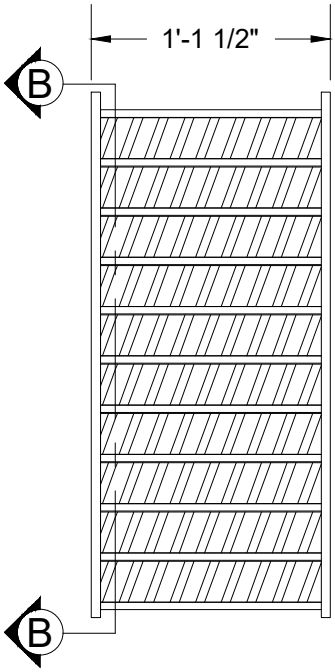

PLAN (GRATE)

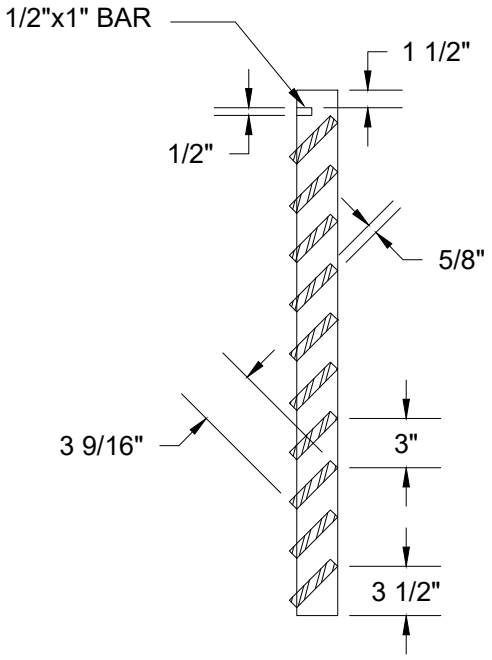

SECTION B-B

NOTE:
THIS GRATE MAY BE REQUIRED IN HILLSIDE AREAS OR WHERE STREET SLOPES EXCEED 5 PERCENT GRADE, OR WHERE THE CATCH BASIN FRAME AND GRATE (STANDARD DETAIL 401C) IS NOT CAPABLE OF INTERCEPTING COMPLETELY THE DESIGN STORM FLOW AT THE CURB.

CITY OF GRESHAM

MODIFIED CATCH BASIN FRAME
WITH SINGLE P-45 GRATE

PWS VERSION: JAN 2020

DRAWN	CMC
REV. DATE	JAN 2019
APPR.	
DETAIL NO.	401F

FILENAME: \\gresham.gov\cog\inter-departmental\development engineering projects\public works standards\2.0 pws revision copy\details\400_stormwater\storm cad\401f.dwg, Plotted 12/6/2019 1:32 PM, By: Anthony Dollowitch, ANSI FULL BLEED A (8.50 X 11.00 INCHES)

NOTE:
SET "DRAINS TO RIVER" BUTTON INTO CURB BEFORE CONCRETE HAS CURED. CONTACT CITY FOR BUTTON SPECIFICATIONS (TYPICAL).

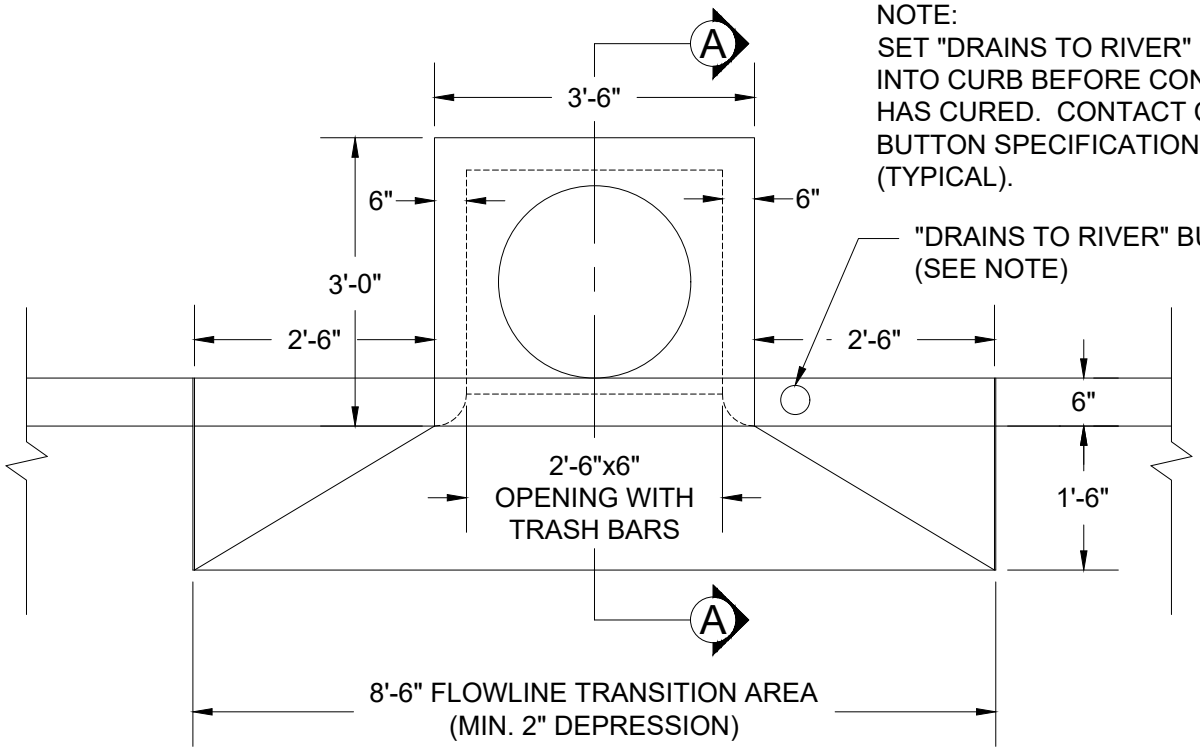

PLAN

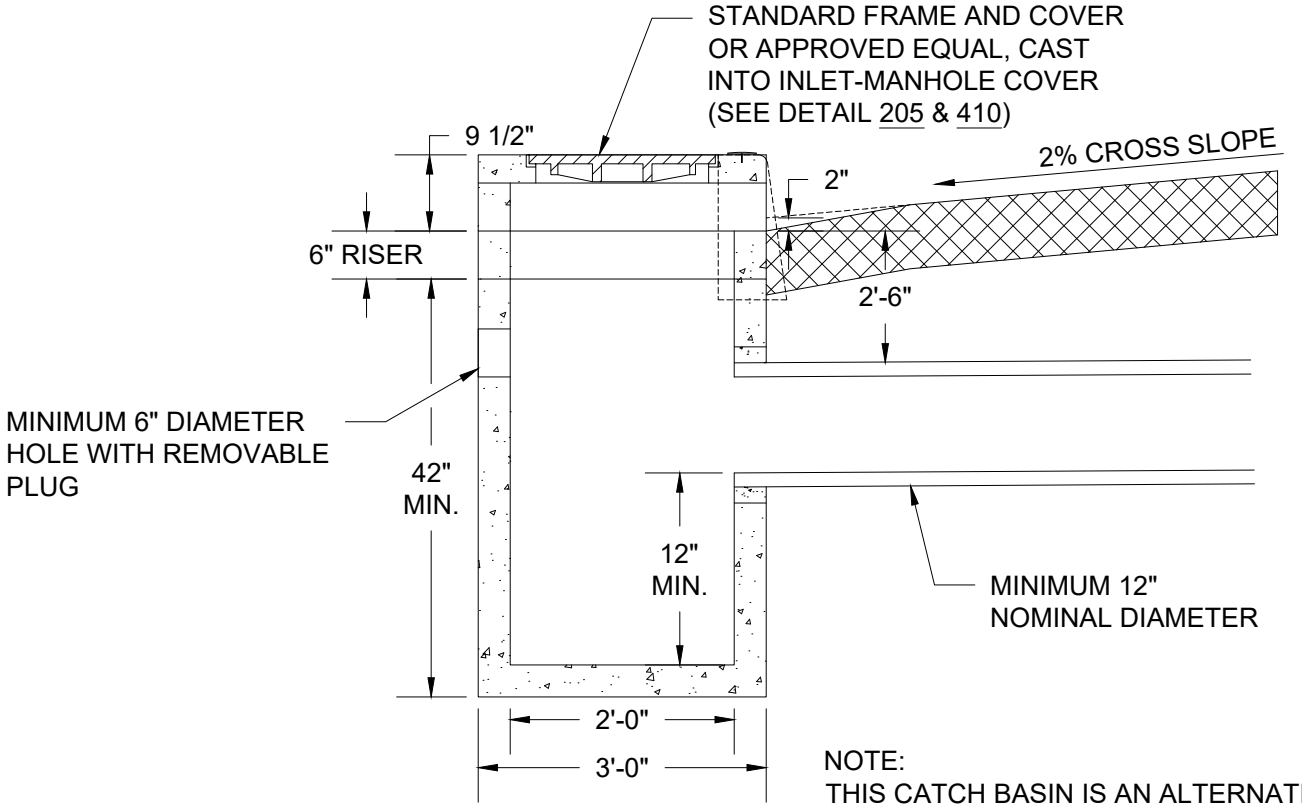

SECTION A-A

NOTE:
THIS CATCH BASIN IS AN ALTERNATIVE, FOR USE IN SPECIAL CIRCUMSTANCES AS REQUIRED BY THE ENGINEER.

CITY OF GRESHAM

NON-GRATED CATCH BASIN

PWS VERSION: JAN 2020

DRAWN	CMC
REV. DATE	JAN 2019
APPR.	
DETAIL NO.	402

FILENAME: \\gresham.gov\cog\inter-departmental\development engineering projects\public works standards\2.0 pws revision copy\details\400_stormwater\storm cad\402.dwg, Plotted 12/6/2019 1:50 PM, By: Anthony Dollowitch, ANSI FULL BLEED A (8.50 X 11.00 INCHES)

1. CONCRETE SHALL ATTAIN A MINIMUM COMPRESSIVE STRENGTH OF 3300 P.S.I. IN 28 DAYS.

2. FOR FRAME & GRATE DETAIL SEE DETAIL 403C.

3. WHERE PRECAST INLETS ARE USED AS AN ALTERNATIVE TO CAST IN PLACE INLETS, A 4" COMPACTED LEVELING BED OF 3/4"-0" CRUSHED AGGREGATE SHALL BE PROVIDED.

4. WHEN INSTALLED AS A POND OUTLET, CHANNEL BOTTOM WITHOUT A SUMP.

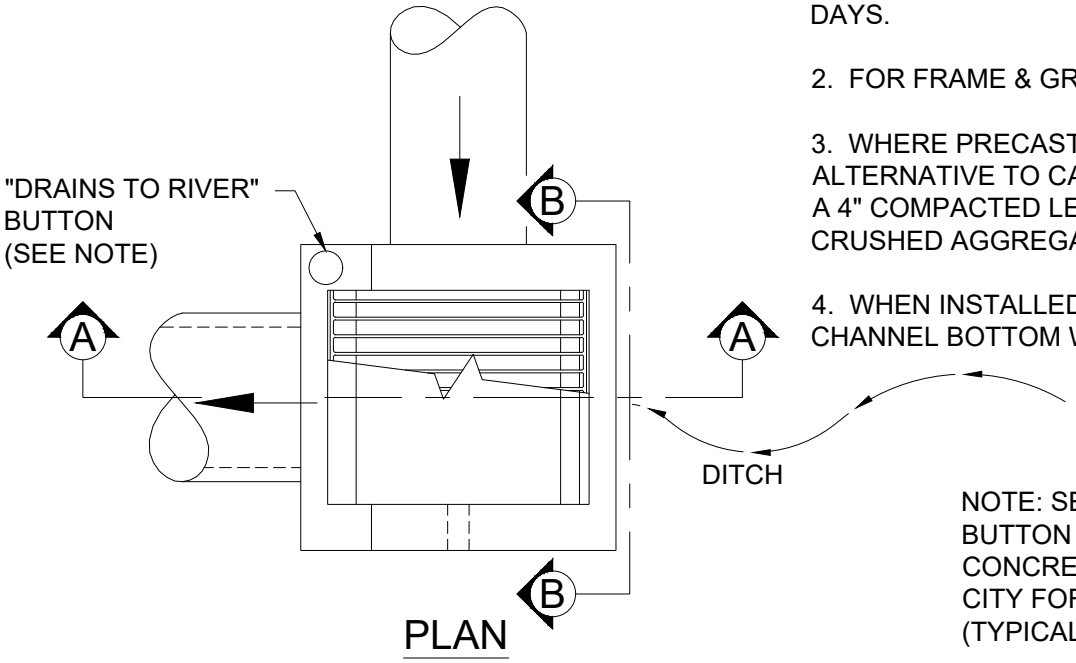

PLAN

NOTE: SET "DRAINS TO RIVER" BUTTON INTO CURB BEFORE CONCRETE HAS CURED. CONTACT CITY FOR BUTTON SPECIFICATIONS (TYPICAL).

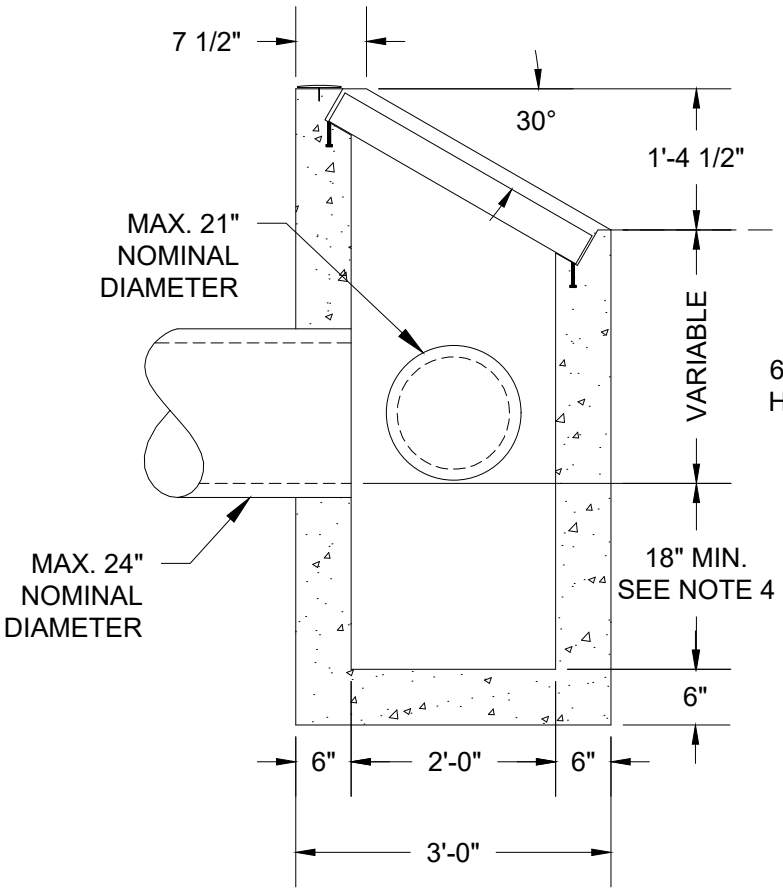

SECTION A-A

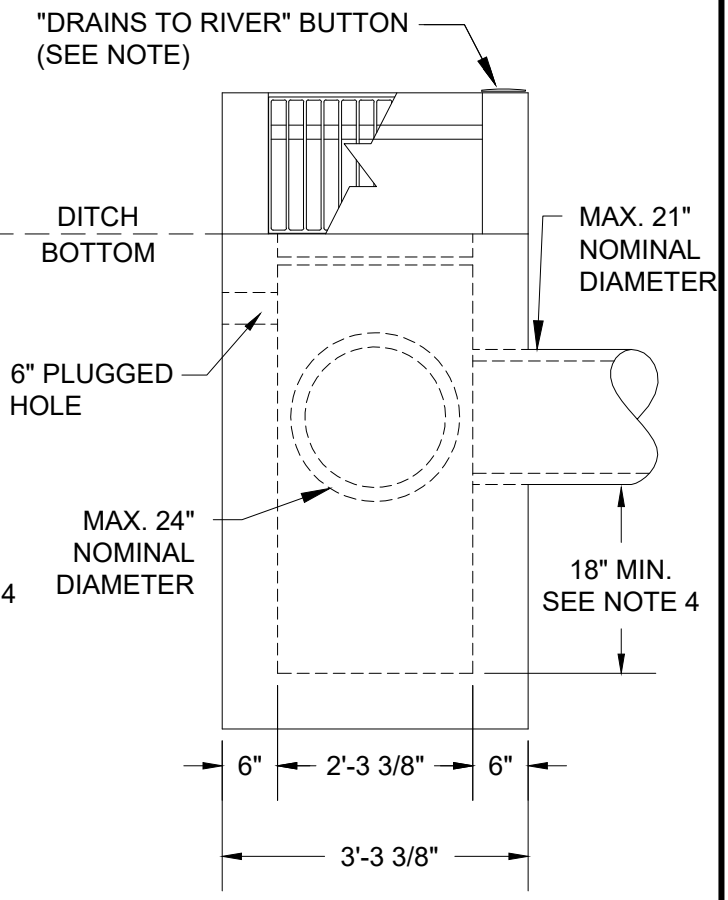

SECTION B-B

CITY OF GRESHAM

DITCH INLET
TYPE D - 30°

PWS VERSION: JAN 2020

DRAWN	CMC
REV. DATE	JAN 2020
APPR.	
DETAIL NO.	403A

FILENAME: \\gresham.gov\cog\inter-departmental\development engineering projects\public works standards\2.0 pws revision copy\details\400_stormwater\storm cad\403a.dwg, Plotted 12/6/2019 2:09 PM, By: Anthony Dollowitch, ANSI FULL BLEED A (8.50 X 11.00 INCHES)

1. CONCRETE SHALL ATTAIN A MINIMUM COMPRESSIVE STRENGTH OF 3300 P.S.I. IN 28 DAYS

2. FOR FRAME & GRATE DETAIL SEE DETAIL 403C

3. WHERE PRECAST INLETS ARE USED AS AN ALTERNATIVE TO CAST IN PLACE INLETS, A 4" COMPACTED LEVELING BED OF 3/4"-0" CRUSHED AGGREGATE SHALL BE PROVIDED

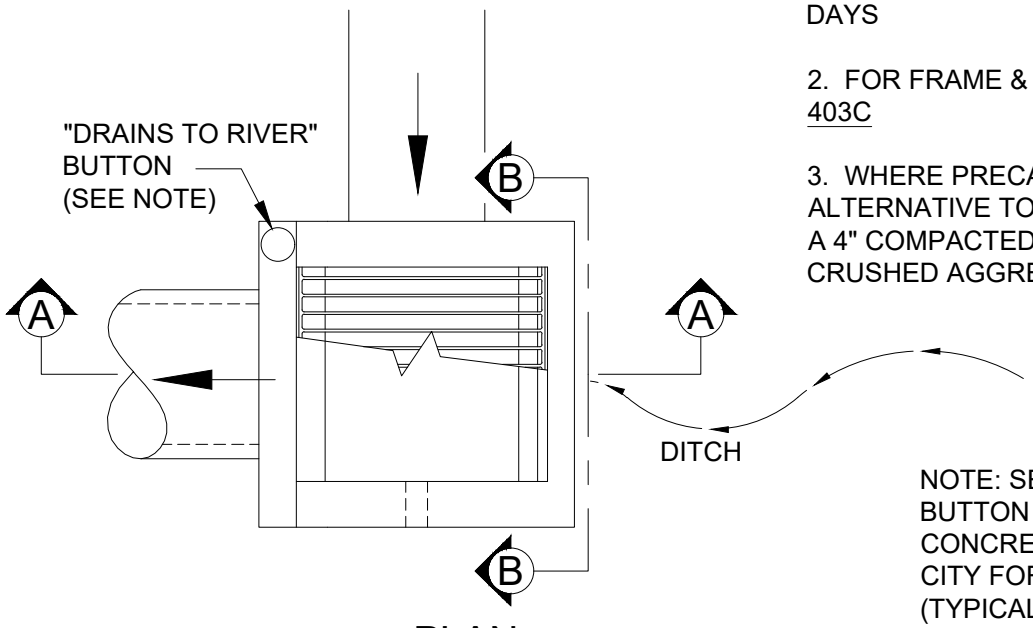

PLAN

NOTE: SET "DRAINS TO RIVER" BUTTON INTO CURB BEFORE CONCRETE HAS CURED. CONTACT CITY FOR BUTTON SPECIFICATIONS (TYPICAL).

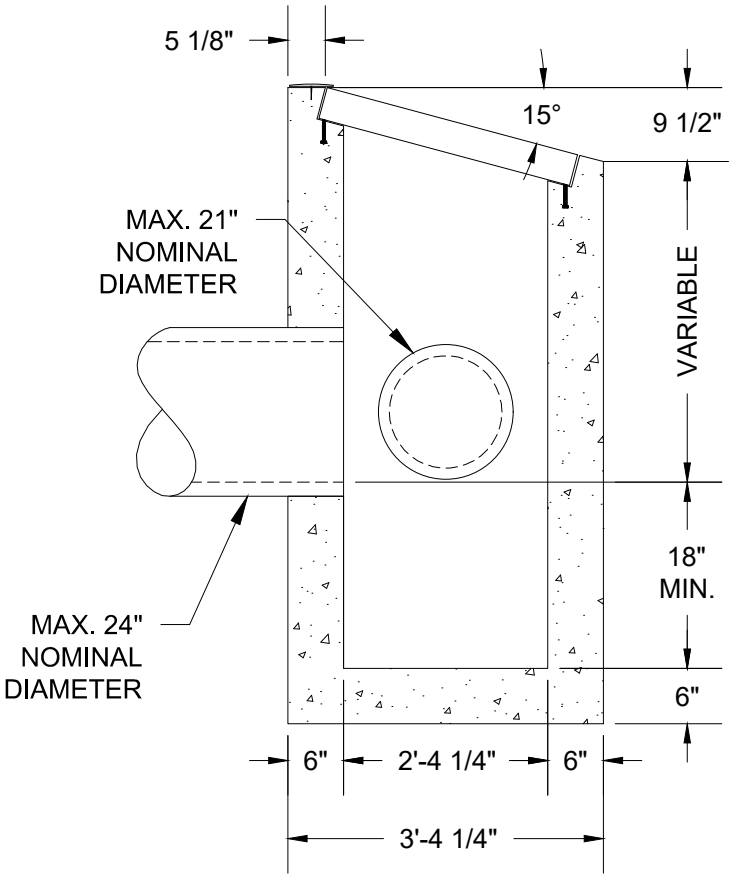

SECTION A-A

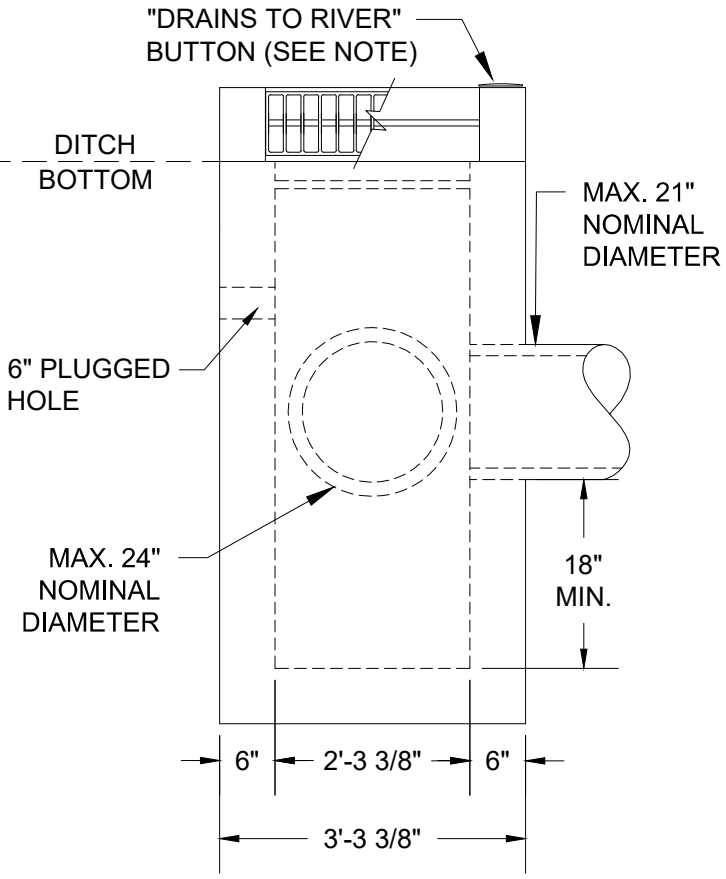

SECTION B-B

CITY OF GRESHAM

DITCH INLET
TYPE D - 15°

PWS VERSION: JAN 2020

DRAWN	CMC
REV. DATE	JAN 2019
APPR.	
DETAIL NO.	403B

FILENAME: \\gresham.gov\cog\inter-departmental\development engineering projects\public works standards\2.0 pws revision copy\details\400_stormwater\storm cad\403b.dwg, Plotted 12/6/2019 2:15 PM, By: Anthony Dollowitch, ANSI FULL BLEED A (8.50 X 11.00 INCHES)

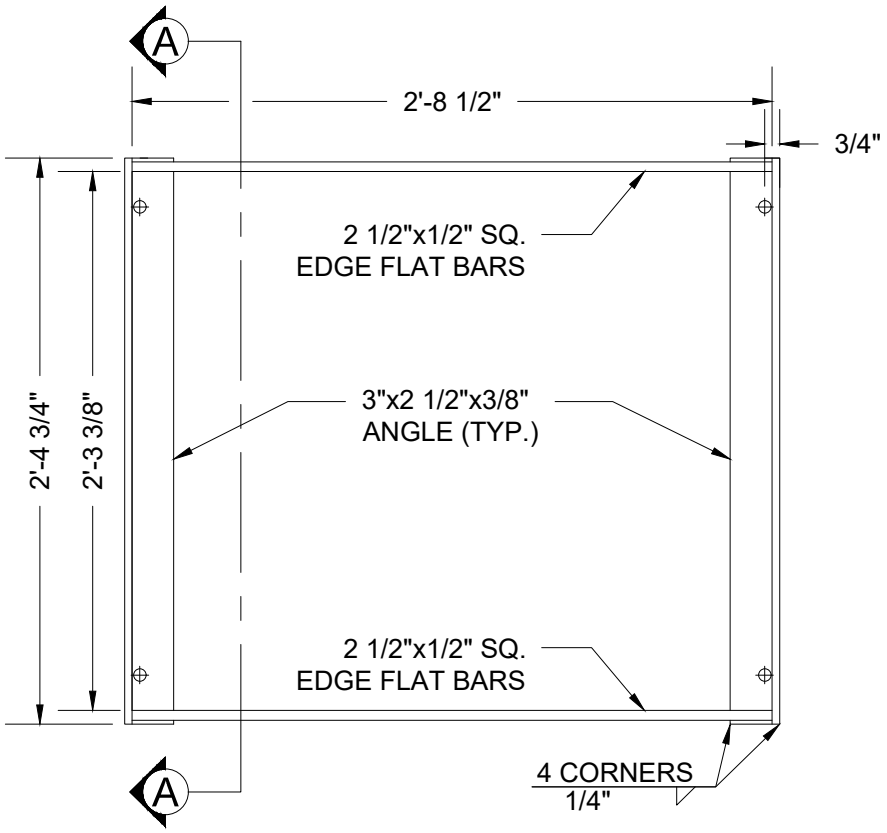

PLAN (FRAME)

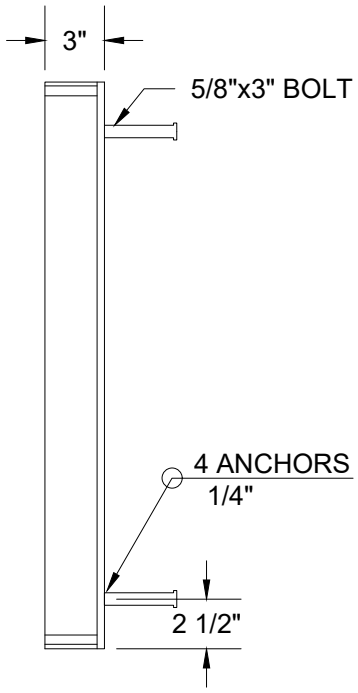

SECTION A-A

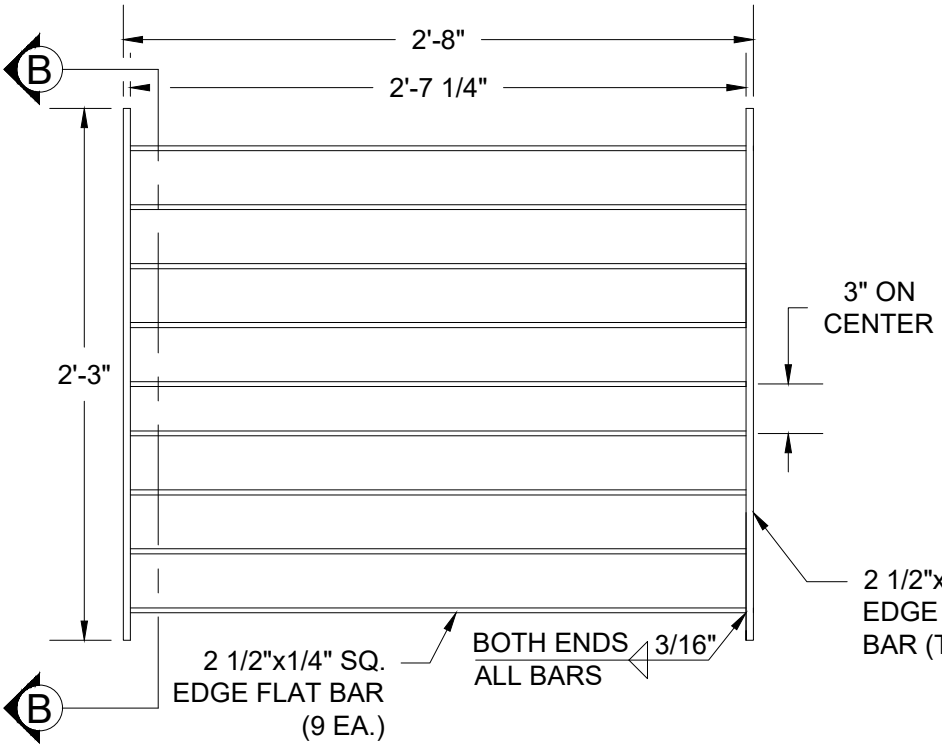

PLAN (GRATE)

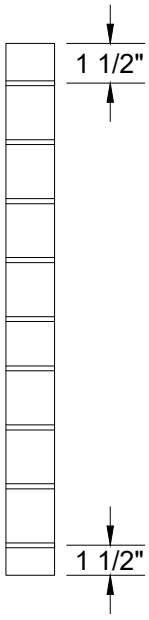

SECTION B-B

1. WHEN INSTALLED AS A POND OUTLET GRATE, HINGE THE TOP OF THE GRATE TO THE FRAME.

CITY OF GRESHAM

DITCH INLET FRAME AND GRATE

PWS VERSION: JAN 2020

DRAWN	CMC
REV. DATE	JAN 2020
APPR.	
DETAIL NO.	403C

FILENAME: \\gresham.gov\cog\inter-departmental\development engineering projects\public works standards\2.0 pws revision copy\details\400_stormwater\storm cad\403c.dwg, Plotted 12/6/2019 2:23 PM, By: Anthony Dollowitch, ANSI FULL BLEED A (8.50 X 11.00 INCHES)

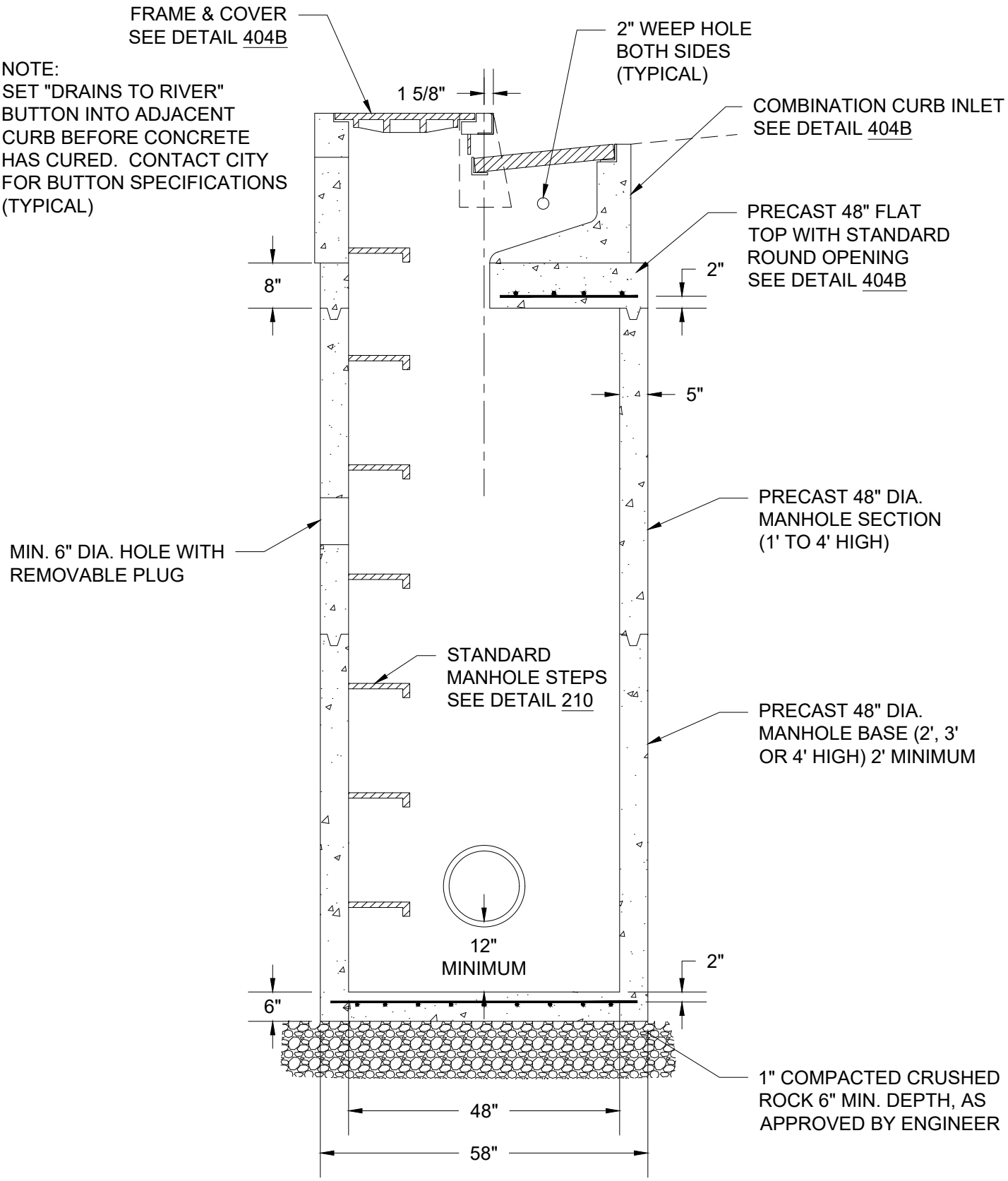

PROFILE

CITY OF GRESHAM

INLET-MANHOLE STANDARD

PWS VERSION: JAN 2020

DRAWN	CMC
REV. DATE	JAN 2019
APPR.	
DETAIL NO.	404A

FILENAME: \\gresham.gov\cog\inter-departmental\development engineering projects\public works standards\2.0 pws revision copy\details\400_stormwater\storm cad\404a.dwg, Plotted 12/6/2019 2:27 PM, By: Anthony Dollowitch, ANSI FULL BLEED A (8.50 X 11.00 INCHES)

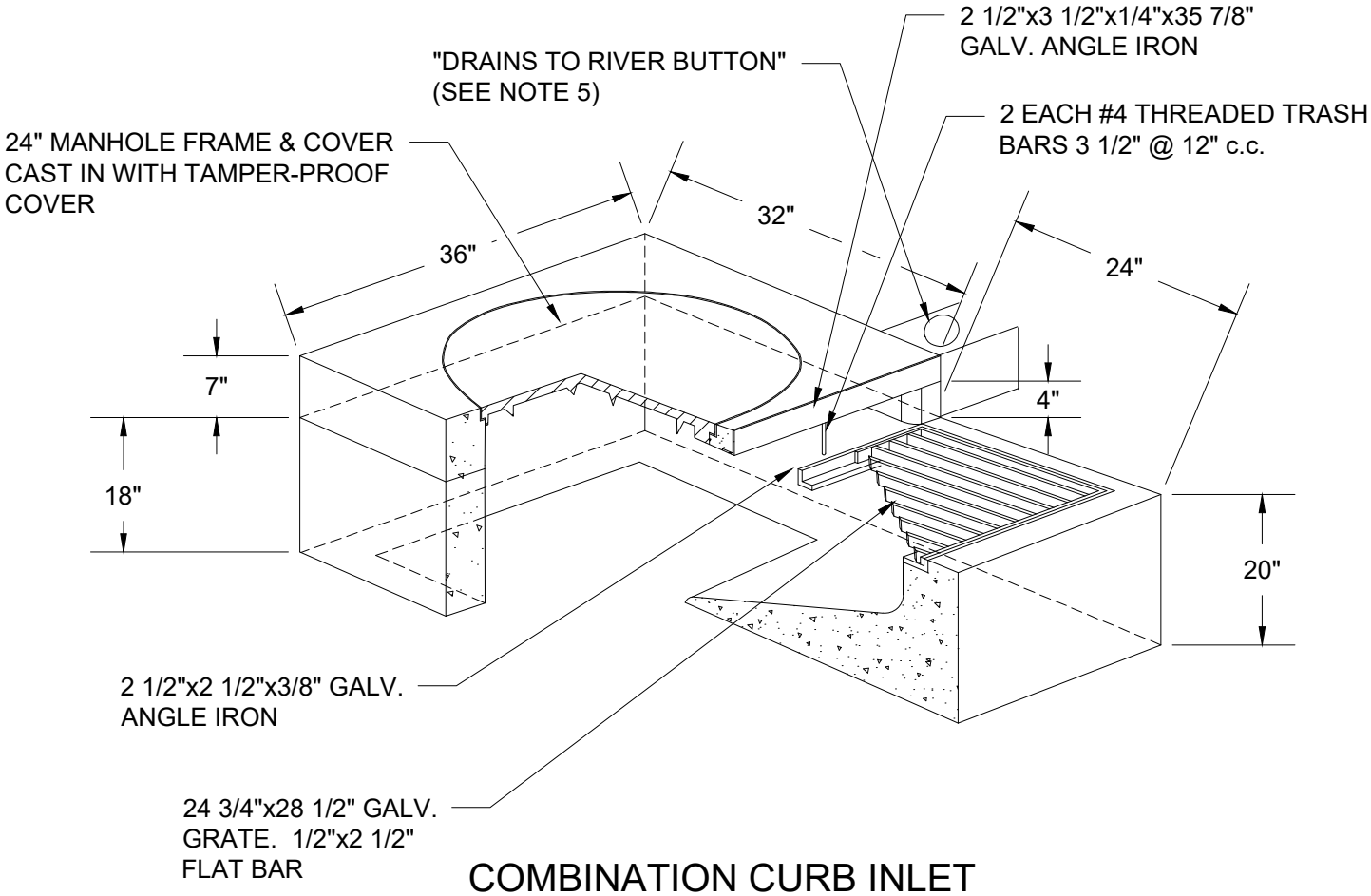

COMBINATION CURB INLET

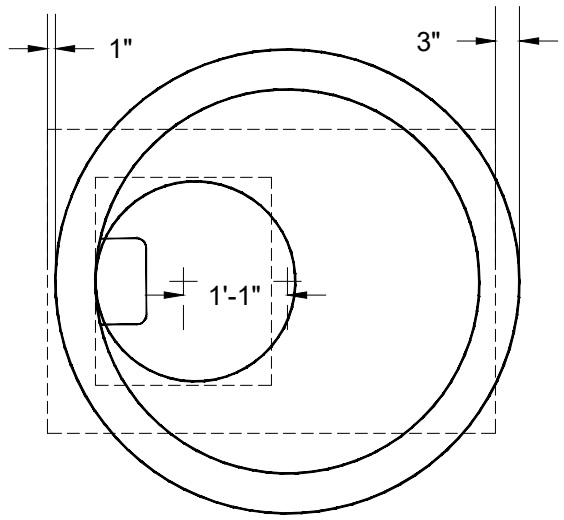

STANDARD FLAT TOP WITH ROUND OPENING

NOTES:

1. REINFORCING FOR INLET UNIT: 3 EA. #4 HORIZONTAL BARS.
2. REINFORCING FOR TOP UNIT: 2 EA. #3 HORIZONTAL BARS.
3. REINFORCING FOR INLET SLOPED BASE: 4" X 4" MESH.
4. GUTTER IS TAPERED DOWN TO GRATE INLET.
5. SET "DRAINS TO RIVER" BUTTON INTO ADJACENT CURB BEFORE CONCRETE HAS CURED, CONTACT CITY FOR BUTTON SPECIFICATIONS (TYPICAL).

CITY OF GRESHAM

INLET-MANHOLE
COMBINATION CURB INLET

PWS VERSION: JAN 2020

DRAWN	CMC
REV. DATE	JAN 2019
APPR.	
DETAIL NO.	404B

FILENAME: \\gresham.gov\cog\inter-departmental\development engineering projects\public works standards\2.0 pws revision copy\details\400_stormwater\storm cad\404b.dwg, Plotted 12/6/2019 2:31 PM, By: Anthony Dollowitch, ANSI FULL BLEED A (8.50 X 11.00 INCHES)

CITY OF GRESHAM

PWS VERSION: JAN 2020

INLET-MANHOLE ALTERNATE TOP

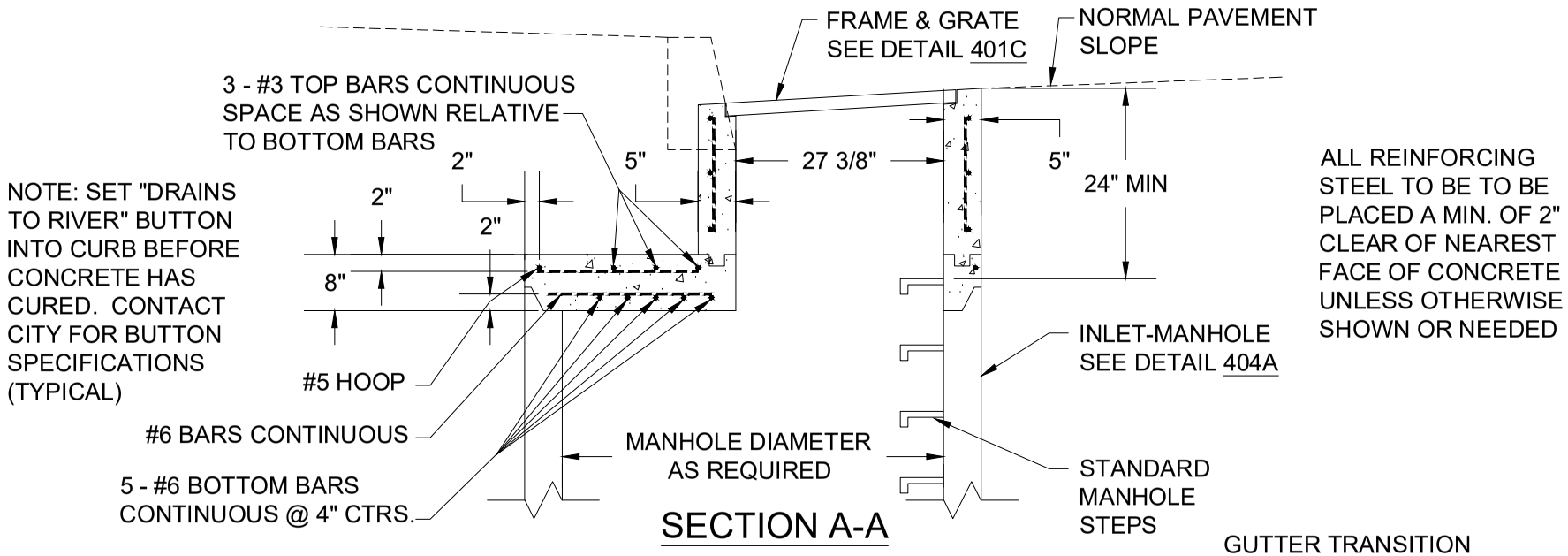

SECTION A-A

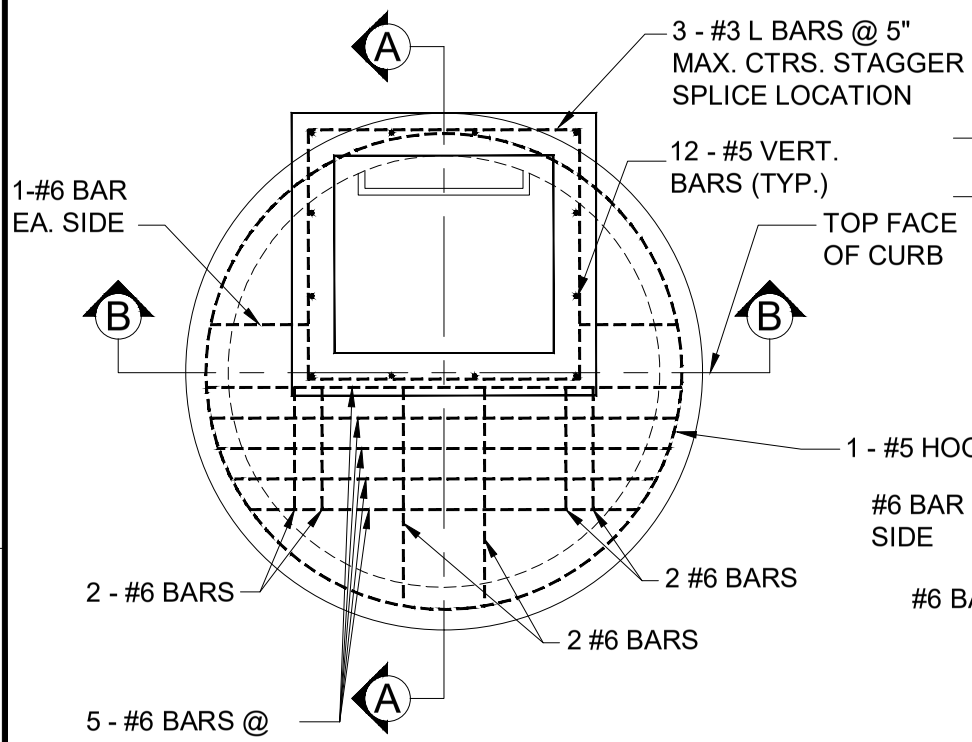

PLAN

(TOP BARS NOT SHOWN IN PLAN VIEW)

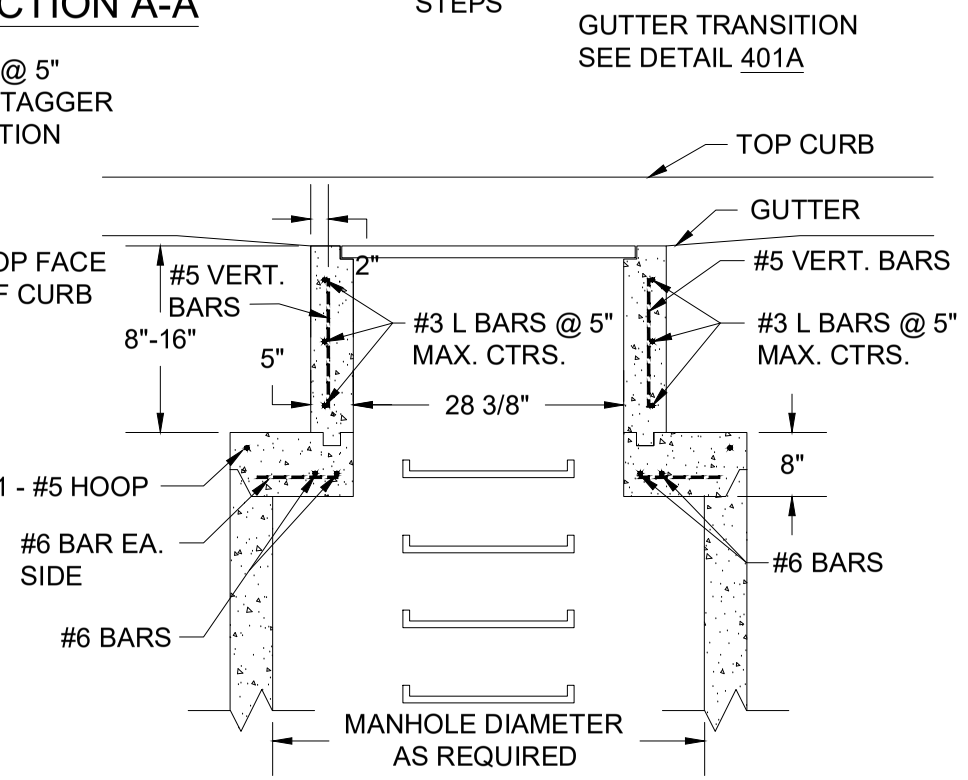

SECTION B-B

DRAWN	CMC
REV. DATE	JAN 2019
APPR.	
DETAIL NO.	404C

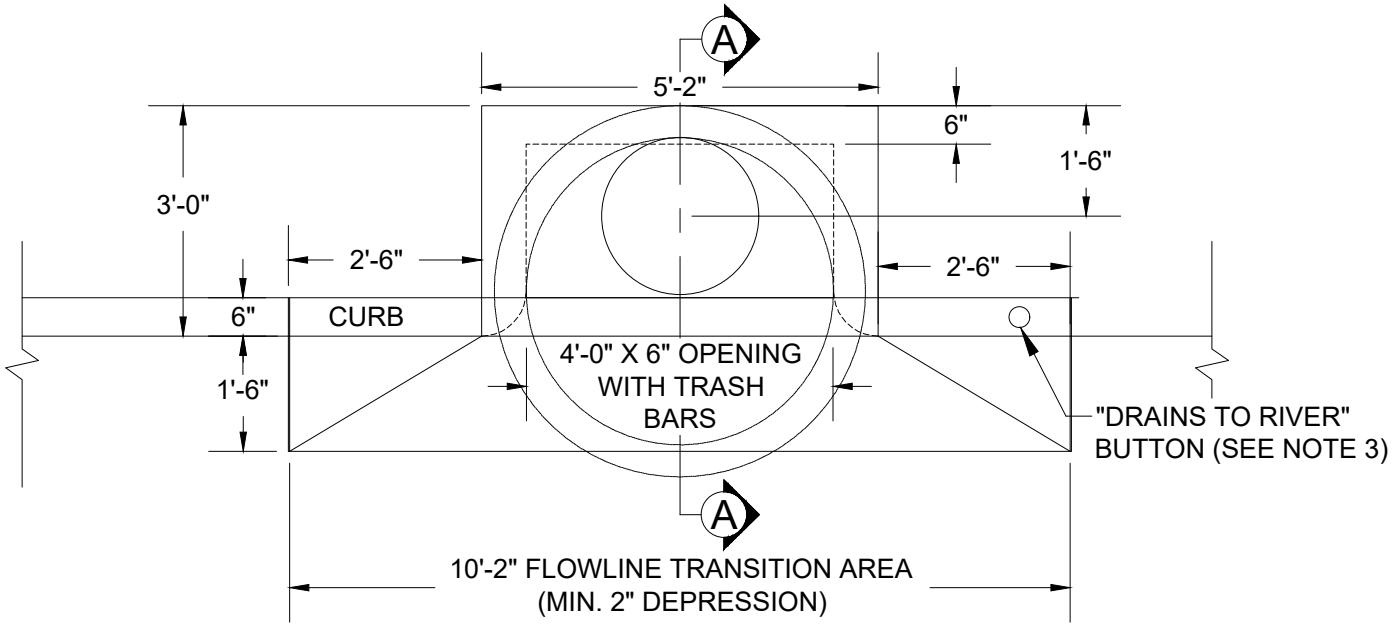

PLAN

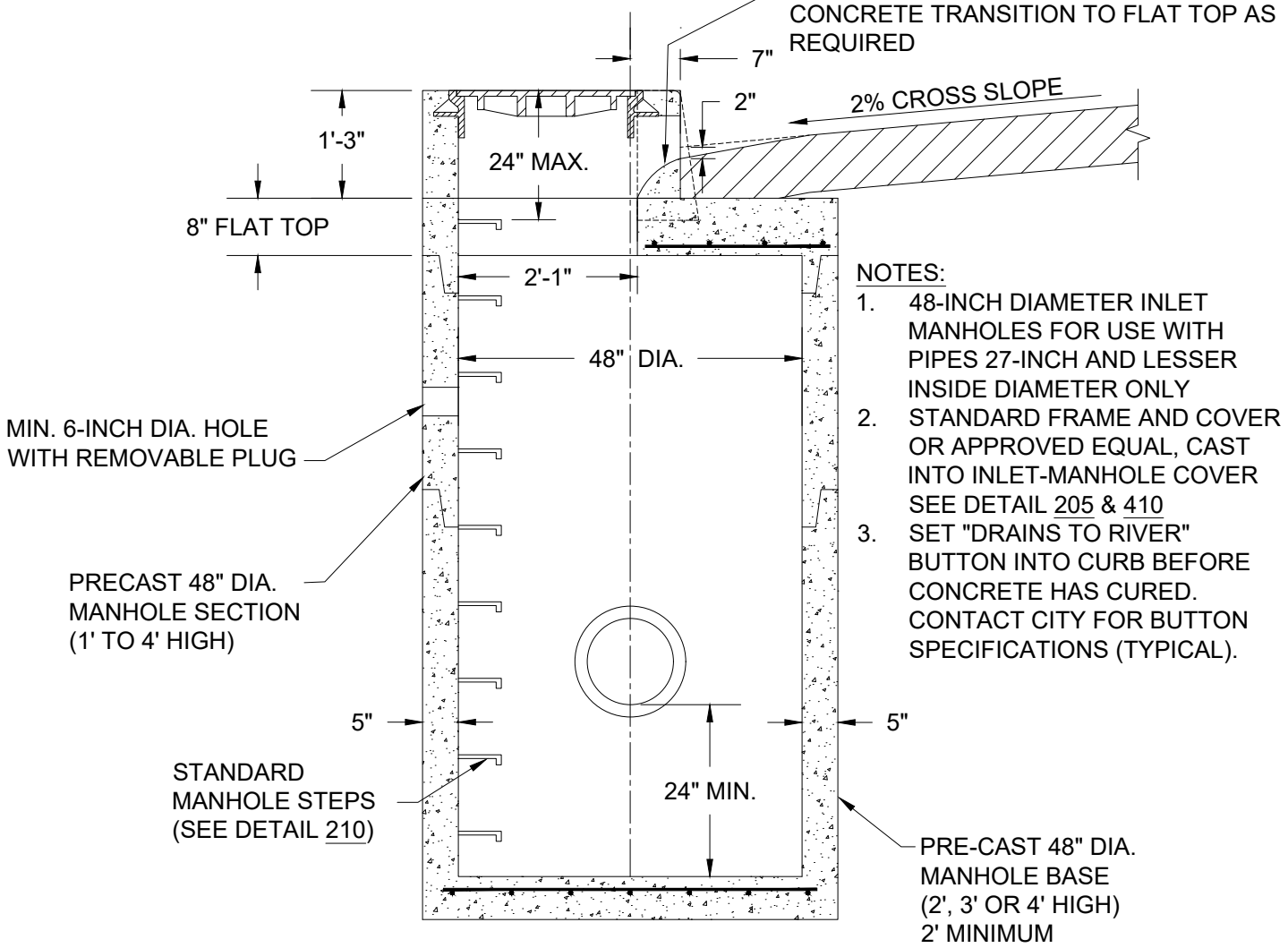

NOTES:

1. 48-INCH DIAMETER INLET MANHOLES FOR USE WITH PIPES 27-INCH AND LESSER INSIDE DIAMETER ONLY
2. STANDARD FRAME AND COVER OR APPROVED EQUAL, CAST INTO INLET-MANHOLE COVER SEE DETAIL 205 & 410
3. SET "DRAINS TO RIVER" BUTTON INTO CURB BEFORE CONCRETE HAS CURED. CONTACT CITY FOR BUTTON SPECIFICATIONS (TYPICAL).

SECTION A-A

CITY OF GRESHAM	NON-GRATED INLET-MANHOLE (A)	DRAWN CMC
		REV. DATE JAN 2019
		APPR.
	PWS VERSION: JAN 2020	DETAIL NO. 404D

FILENAME: \\gresham.gov\cog\inter-departmental\development engineering projects\public works standards\2.0 pws revision copy\details\400_stormwater\storm cad\404d.dwg, Plotted 12/6/2019 2:35 PM, By: Anthony Dollowitch, ANSI FULL BLEED A (8.50 X 11.00 INCHES)

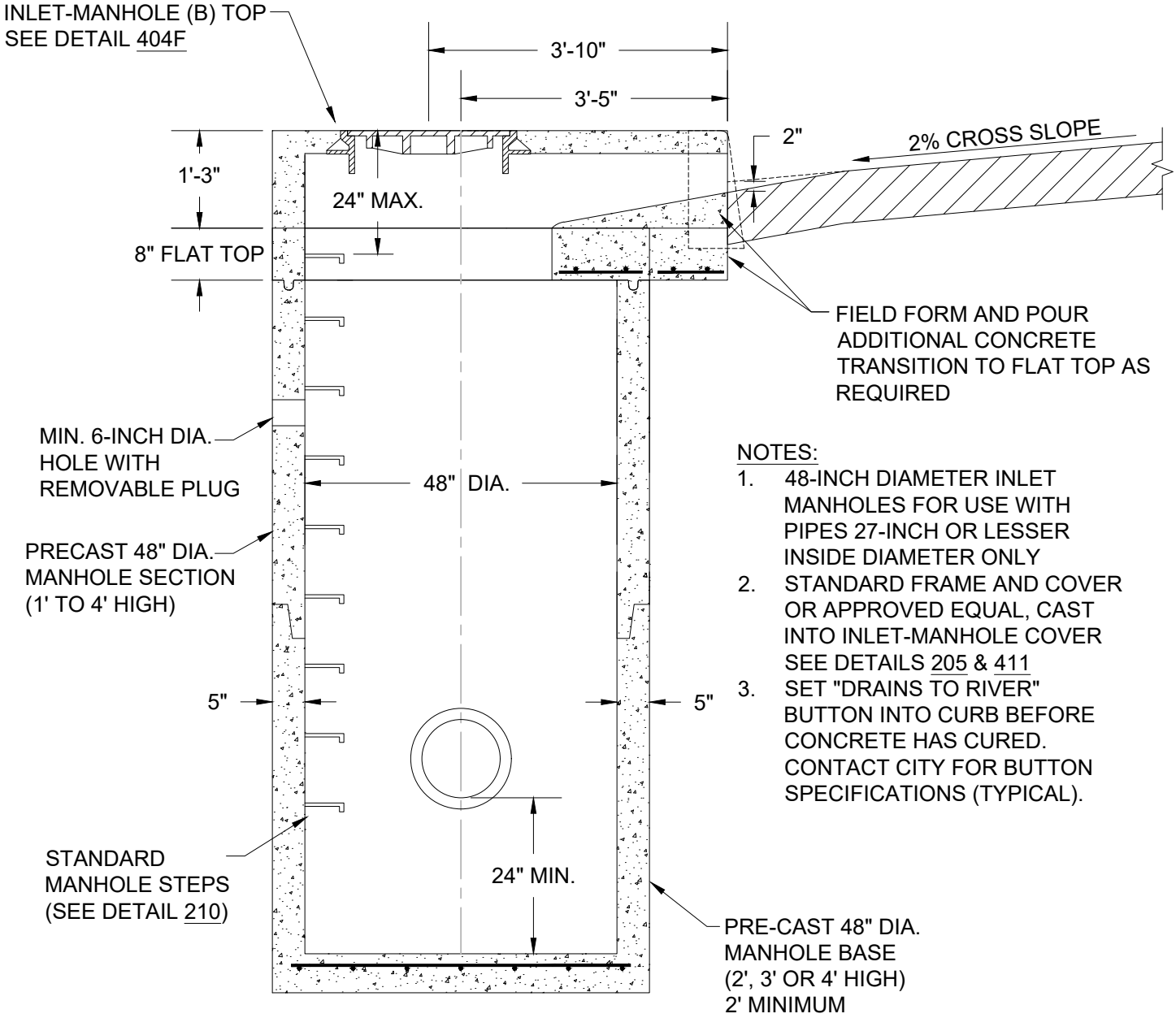

NOTES:

1. 48-INCH DIAMETER INLET MANHOLES FOR USE WITH PIPES 27-INCH OR LESSER INSIDE DIAMETER ONLY
2. STANDARD FRAME AND COVER OR APPROVED EQUAL, CAST INTO INLET-MANHOLE COVER SEE DETAILS 205 & 411
3. SET "DRAINS TO RIVER" BUTTON INTO CURB BEFORE CONCRETE HAS CURED. CONTACT CITY FOR BUTTON SPECIFICATIONS (TYPICAL).

PROFILE

CITY OF GRESHAM

NON-GRATED INLET-MANHOLE (B)

PWS VERSION: JAN 2020

DRAWN	CMC
REV. DATE	JAN 2019
APPR.	
DETAIL NO.	404E

FILENAME: \\gresham.gov\cog\inter-departmental\development engineering projects\public works standards\2.0 pws revision copy\details\400_stormwater\storm cad\404e.dwg, Plotted 12/6/2019 2:37 PM, By: Anthony Dollowitch, ANSI FULL BLEED A (8.50 X 11.00 INCHES)

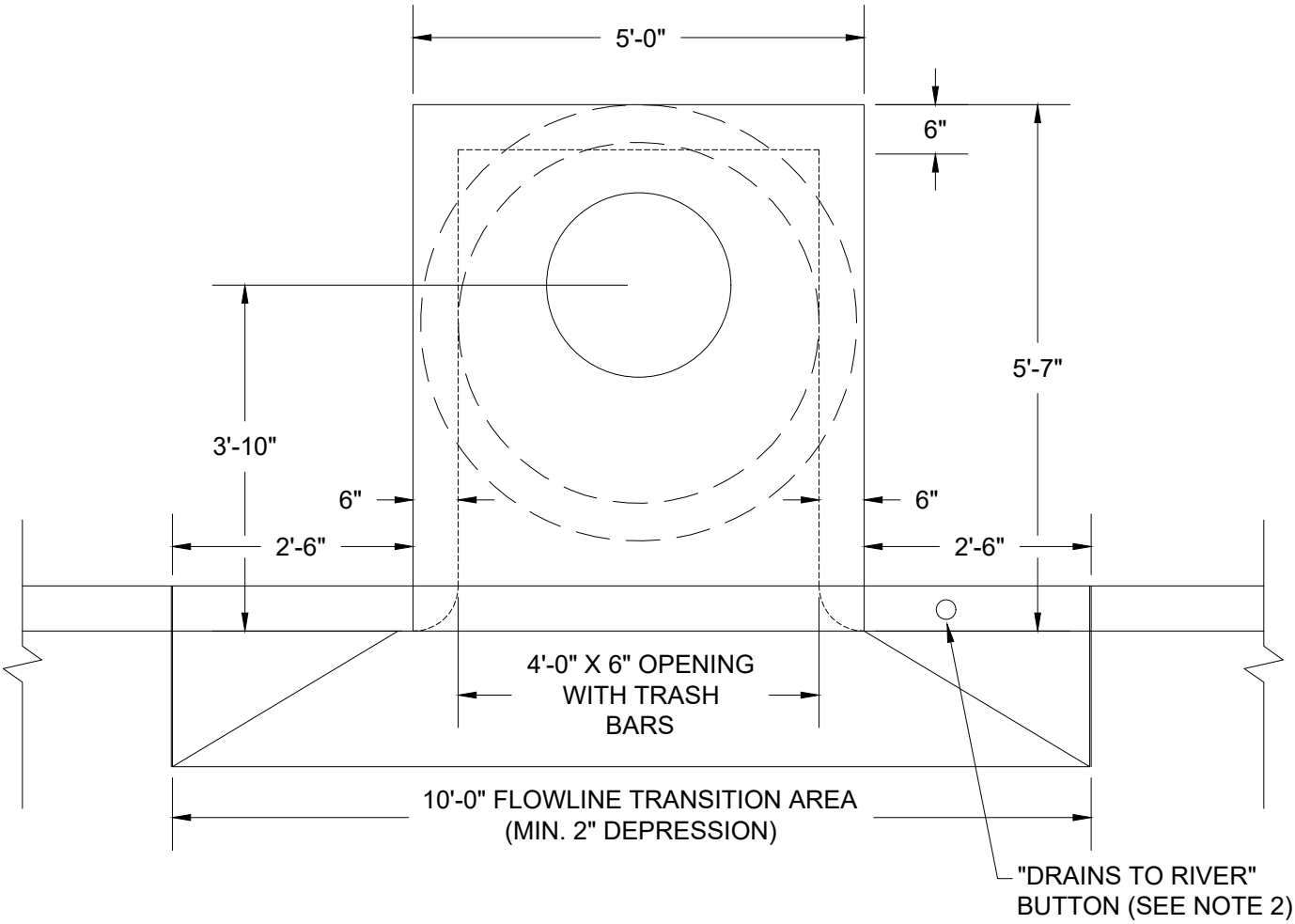

NOTES:

1. STANDARD FRAME AND COVER OR APPROVED EQUAL, CAST INTO INLET-MANHOLE TOP. SEE DETAILS 205 & 411
2. SET "DRAINS TO RIVER" BUTTON INTO CURB BEFORE CONCRETE HAS CURED. CONTACT CITY FOR BUTTON SPECIFICATIONS (TYPICAL).

CITY OF GRESHAM	NON-GRATED INLET-MANHOLE (B) TOP	DRAWN CMC
		REV. DATE JAN 2019
		APPR.
	PWS VERSION: JAN 2020	DETAIL NO. 404F

FILENAME: \\gresham.gov\cog\inter-departmental\development engineering projects\public works standards\2.0 pws revision copy\details\400_stormwater\storm cad\404f.dwg, Plotted 12/6/2019 2:41 PM, By: Anthony Dollowitch, ANSI FULL BLEED A (8.50 X 11.00 INCHES)

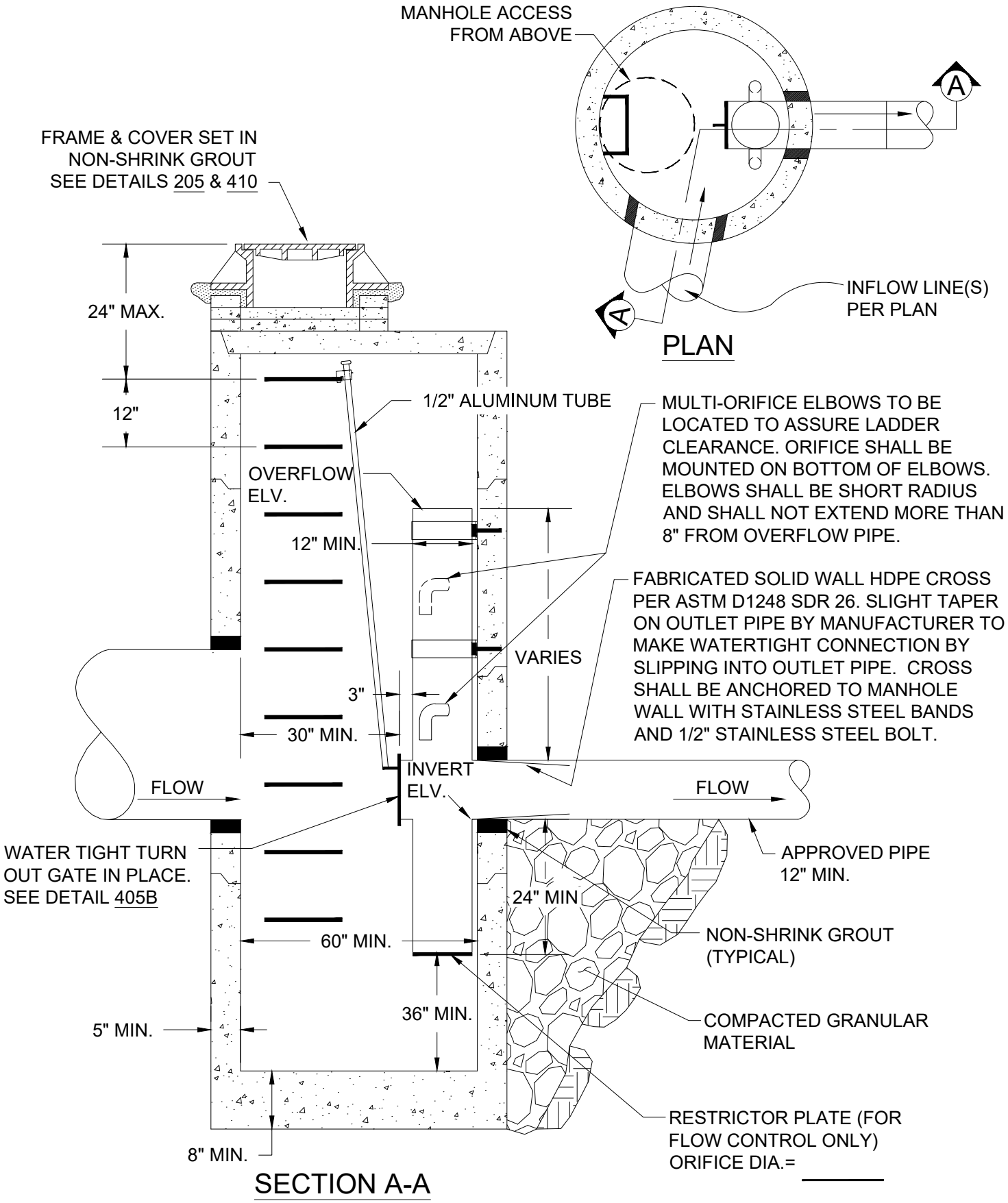

CITY OF GRESHAM

FLOW CONTROL MANHOLE

PWS VERSION: JAN 2020

DRAWN	CMC
REV. DATE	JAN 2020
APPR.	
DETAIL NO.	405A

FILENAME: \\gresham.gov\cog\inter-departmental\development engineering projects\public works standards\2.0 pws revision copy\details\400_stormwater\storm cad\405a.dwg, Plotted 12/6/2019 2:46 PM, By: Anthony Dollowitch, ANSI FULL BLEED A (8.50 X 11.00 INCHES)

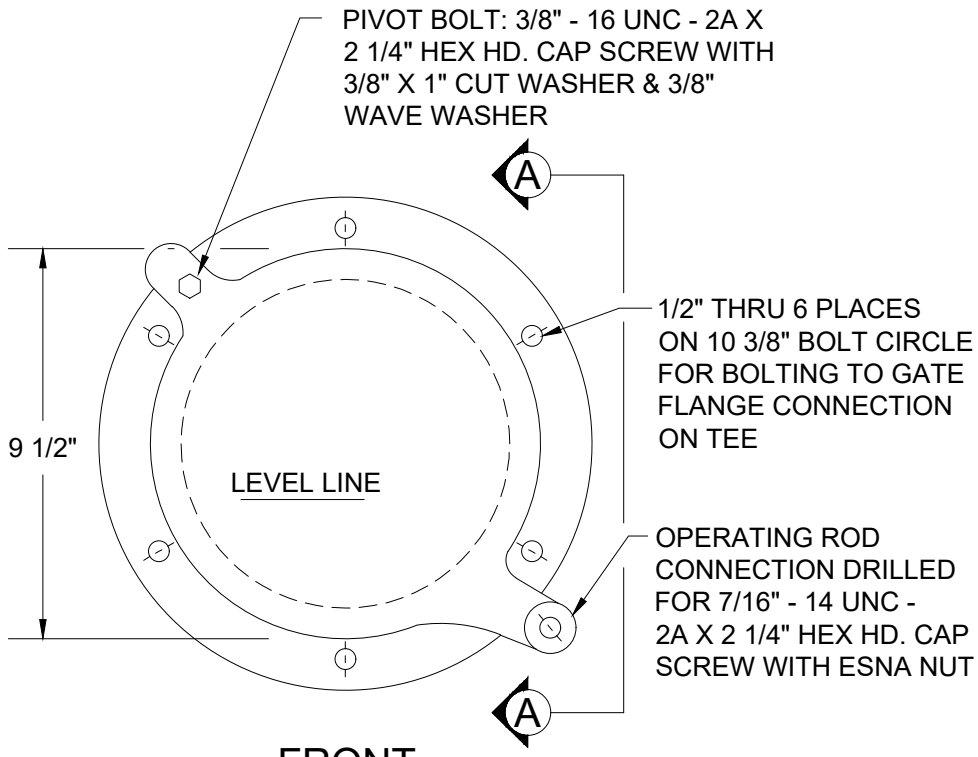

FRONT

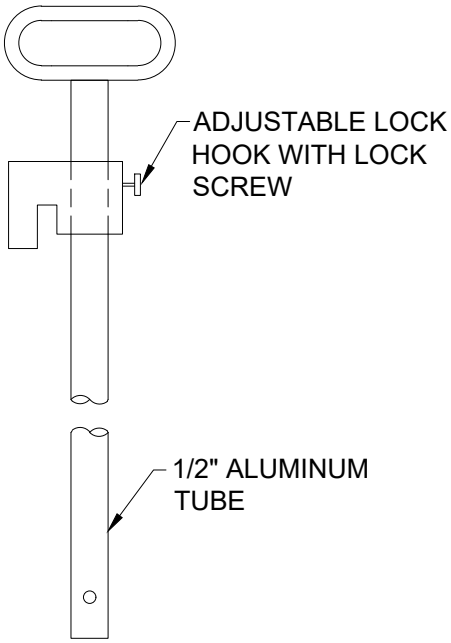

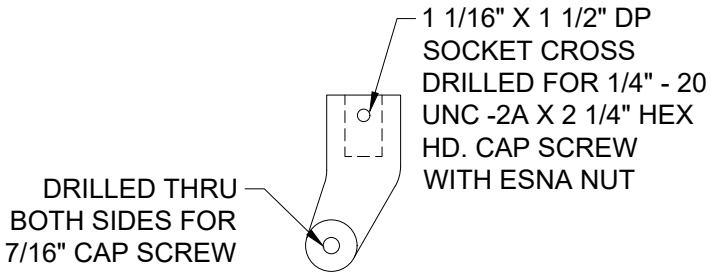

LIFT HANDLE AND ADAPTER

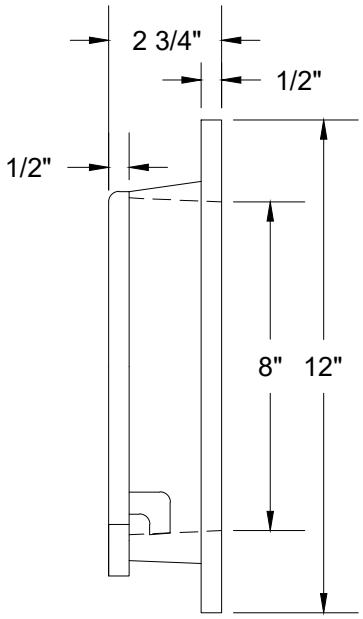

SECTION A-A

NOTES:

1. MATERIAL: CAST ALUMINUM ALLOY PER ASTM B26M
2. ALL FASTENERS SHALL BE STAINLESS STEEL
3. INSTALLER SHOULD CONSULT INSTRUCTION NOTES FURNISHED WITH SHEAR GATES
4. A NEOPRENE RUBBER GASKET IS REQUIRED BETWEEN THE RISER MOUNTING FLANGE AND THE GATE FLANGE
5. INSTALL SHEAR GATE WITH THE LEVEL-LINE MARKING ON A TRUE HORIZONTAL PLANE WHEN THE GATE IS IN A CLOSED POSITION

CITY OF GRESHAM

8" SHEAR GATE AND LIFT HANDLE

PWS VERSION: JAN 2020

DRAWN	CMC
REV. DATE	JAN 2019
APPR.	
DETAIL NO.	405B

FILENAME: \\gresham.gov\cog\inter-departmental\development engineering projects\public works standards\2.0 pws revision copy\details\400_stormwater\storm cad\405b.dwg, Plotted 12/6/2019 2:48 PM, By: Anthony Dollowitch, ANSI FULL BLEED A (8.50 X 11.00 INCHES)

CITY OF GRESHAM

PWS VERSION: JAN 2020

DETENTION PIPE TYPICAL CLOSED

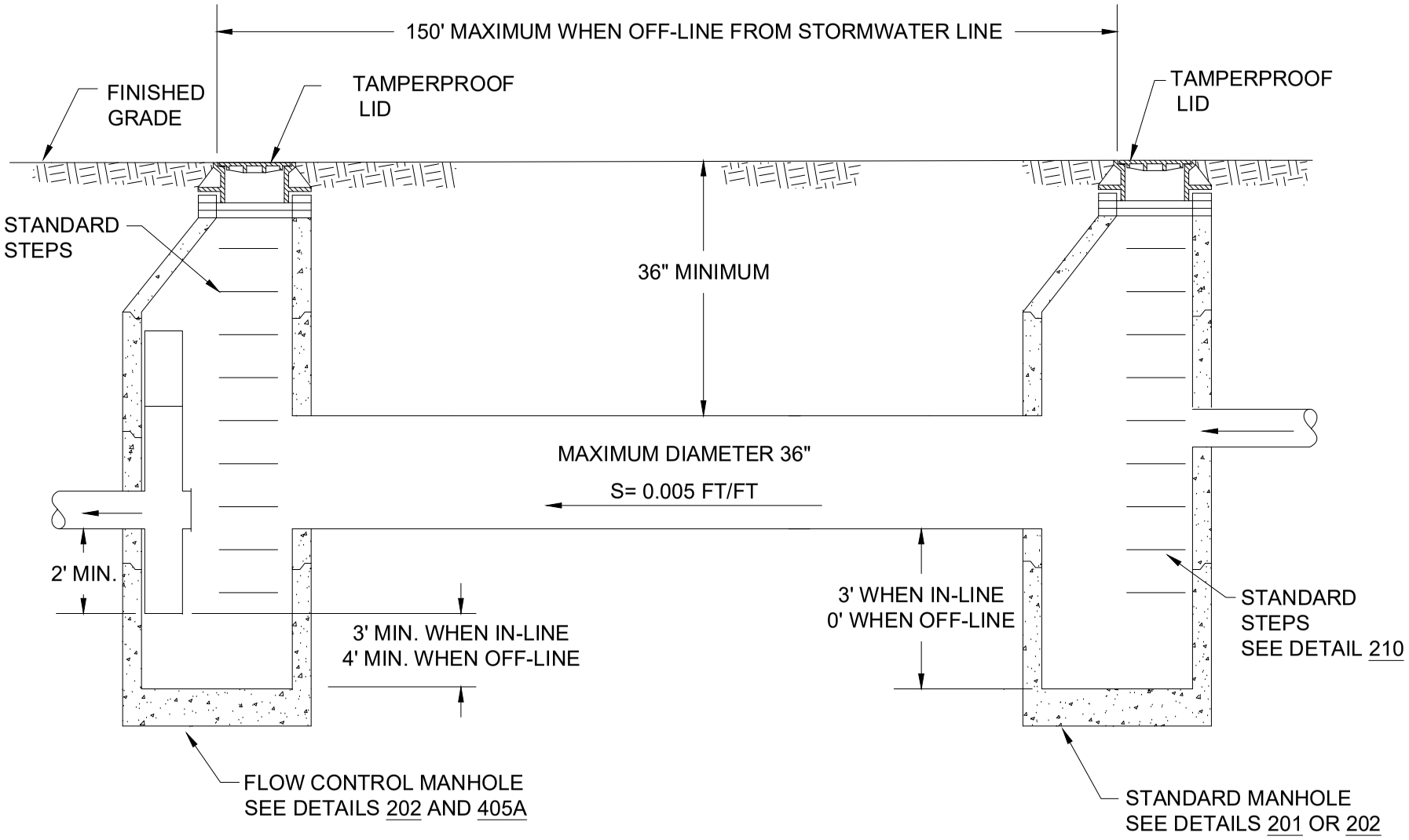

NOTES:

1. THIS DETAIL REPRESENTS A DESIGN CONCEPT. FINAL DESIGN MAY VARY DEPENDING ON SITE CONDITIONS AND SHALL BE APPROVED BY THE ENGINEER.
2. DETENTION PIPE AND ALL CONNECTIONS SHALL BE WATERTIGHT.

DRAWN	CMC
REV. DATE	JAN 2019
APPR.	
DETAIL NO.	406

CITY OF GRESHAM

DRYWELL SYSTEM

PWS VERSION: JAN 2020

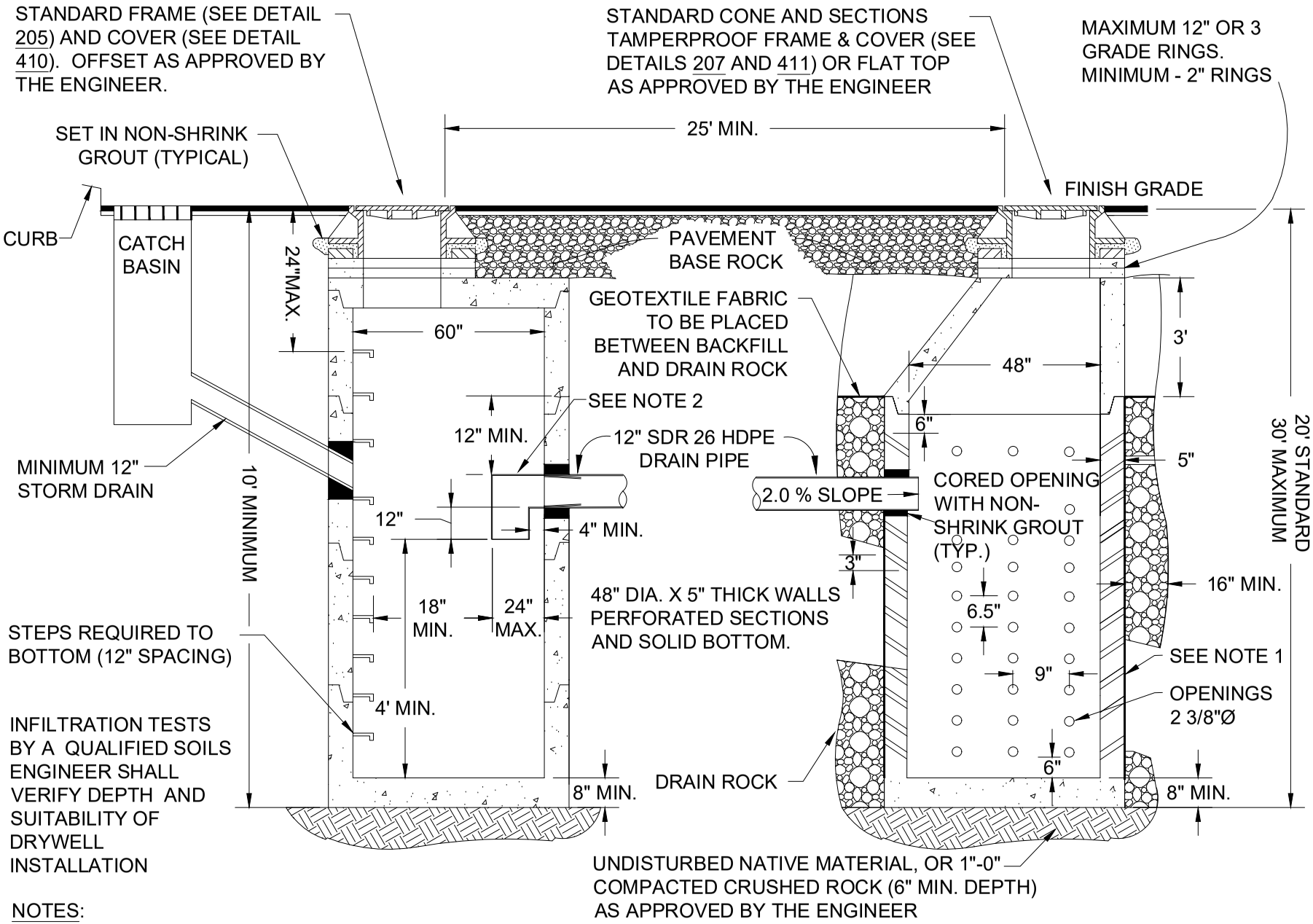

NOTES:

① HDPE WRAP AROUND THE OUTSIDE OF THE PERFORATED SECTIONS SHALL BE ADDED IF THE DRAIN ROCK IS SMALLER THAN 2"-4".

② 12" FABRICATED SOLID WALL HDPE 90° SHORT RADIUS ELBOW PER ASTM D1248 SDR 26. SLIGHT TAPER ON OUTLET PIPE BY MANUFACTURER TO MAKE WATERTIGHT CONNECTION BY SLIPPING INTO OUTLET PIPE. ELBOW SHALL BE ANCHORED TO MANHOLE WALL WITH STAINLESS STEEL BANDS AND 1/2" STAINLESS STEEL BOLT.

③ ALL PIPE TO SEDIMENTATION MANHOLE & PRECAST DRYWELL SHALL HAVE CLASS "B" BEDDING & PIPE ZONE MATERIAL.

DRAWN	CMC
REV. DATE	JAN 2020
APPR.	
DETAIL NO.	407

CITY OF GRESHAM

DRYWELL SYSTEM AND SEDIMENTATION MANHOLE (TYPICAL RETROFIT INSTALLATION)

PWS VERSION: JAN 2020

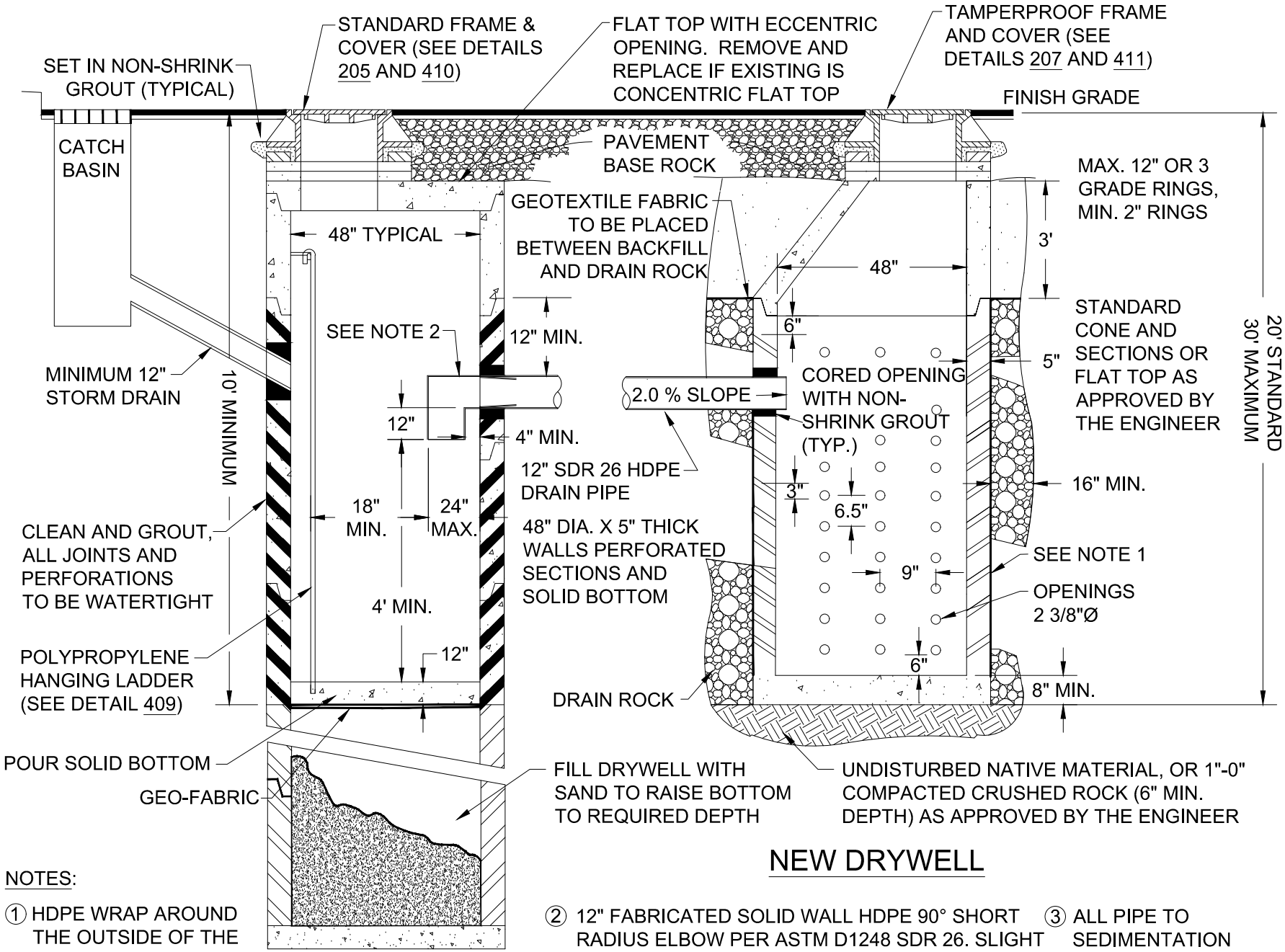

NOTES:

① HDPE WRAP AROUND THE OUTSIDE OF THE PERFORATED SECTIONS SHALL BE ADDED IF THE DRAIN ROCK IS SMALLER THAN 2"-4"

② 12" FABRICATED SOLID WALL HDPE 90° SHORT RADIUS ELBOW PER ASTM D1248 SDR 26. SLIGHT TAPER ON OUTLET PIPE BY MANUFACTURER TO MAKE WATERTIGHT CONNECTION BY SLIPPING INTO OUTLET PIPE. ELBOW SHALL BE ANCHORED TO MANHOLE WALL WITH STAINLESS STEEL BANDS AND 1/2" STAINLESS STEEL BOLT.

③ ALL PIPE TO SEDIMENTATION MANHOLE & PRECAST DRYWELL SHALL HAVE CLASS "B" BEDDING & PIPE ZONE MATERIAL

DRAWN	CMC
REV. DATE	JAN 2020
APPR.	
DETAIL NO.	408

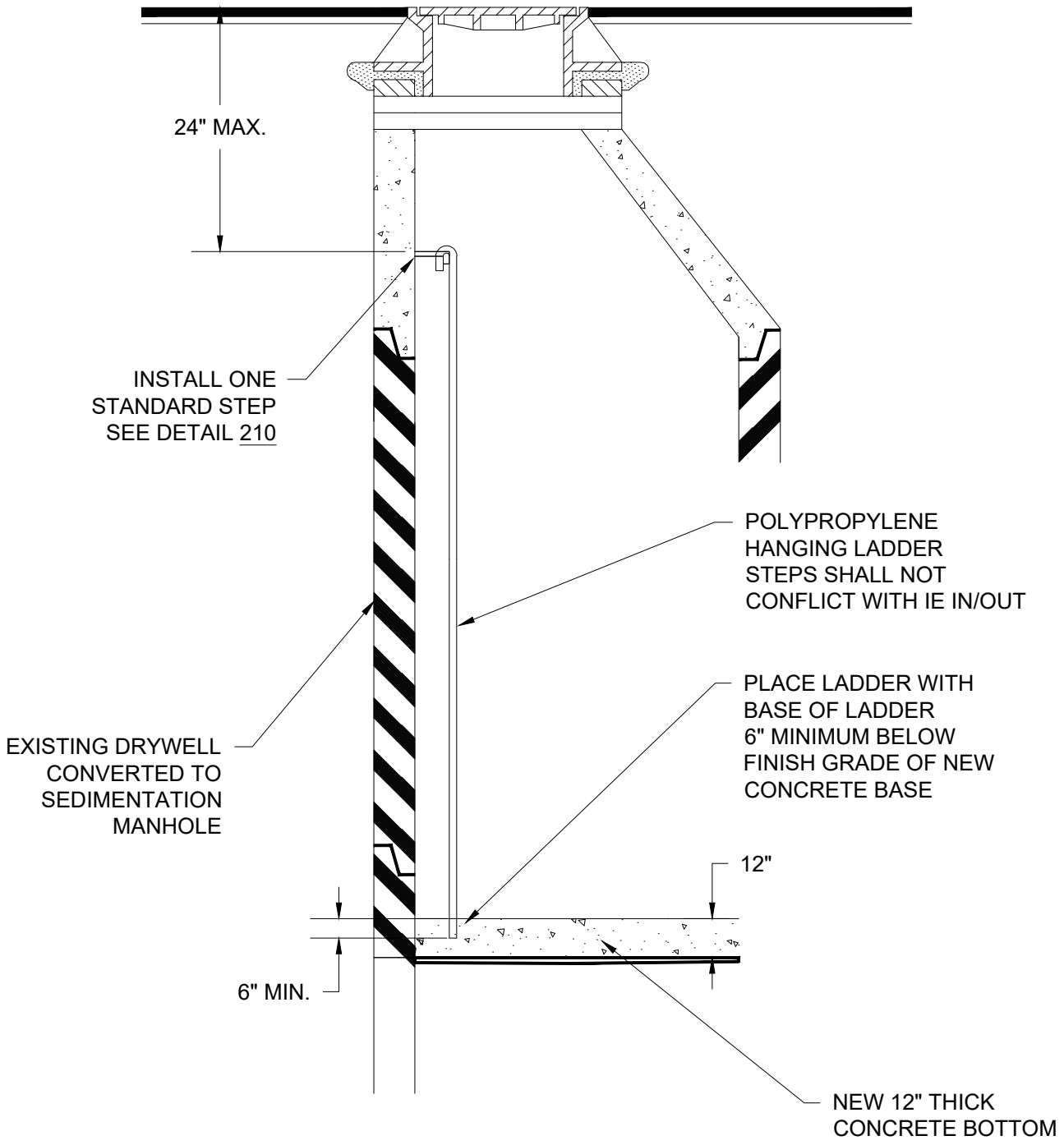

CITY OF GRESHAM

POLYPROPYLENE HANGING LADDER

PWS VERSION: JAN 2020

DRAWN	CMC
REV. DATE	JAN 2019
APPR.	
DETAIL NO.	409

FILENAME: \\gresham.gov\cog\inter-departmental\development engineering projects\public works standards\2.0 pws revision copy\details\400_stormwater\storm cad\409.dwg, Plotted 12/6/2019 3:04 PM, By: Anthony Dollowitch, ANSI FULL BLEED A (8.50 X 11.00 INCHES)

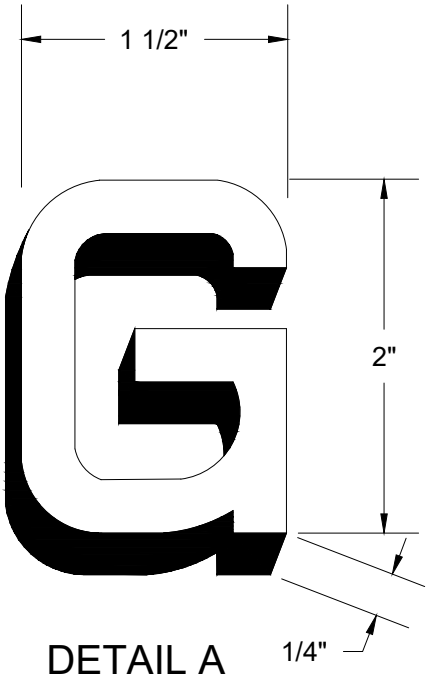

DETAIL A

RAISED TEXT

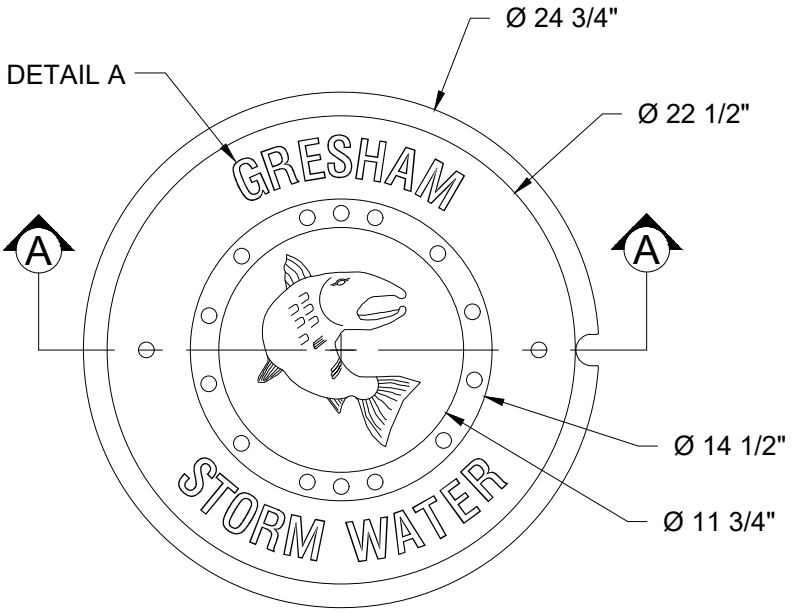

TOP VIEW

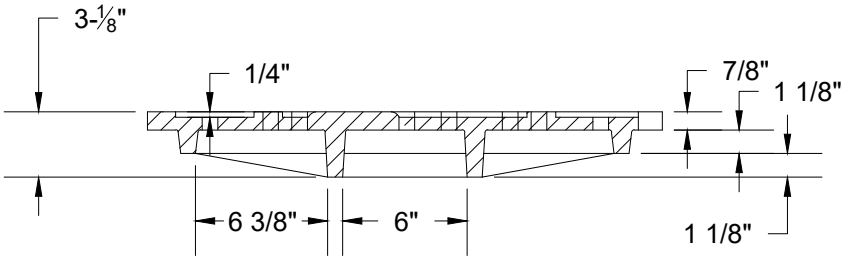

SECTION A-A

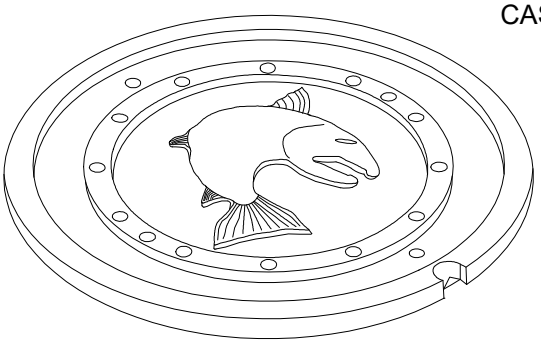

RAISED TEXT NOT SHOWN

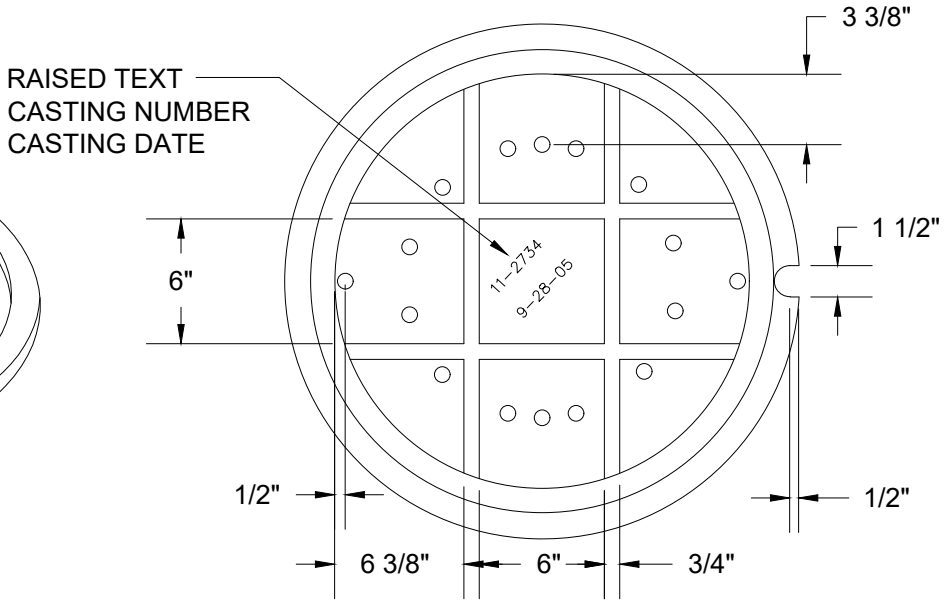

BOTTOM VIEW

CITY OF GRESHAM

STANDARD STORMWATER MANHOLE COVER

PWS VERSION: JAN 2020

DRAWN	CMC
REV. DATE	JAN 2019
APPR.	
DETAIL NO.	410

FILENAME: \\gresham.gov\cog\inter-departmental\development engineering projects\public works standards\2.0 pws revision copy\details\400_stormwater\storm cad\410.dwg, Plotted 12/6/2019 3:13 PM, By: Anthony Dollowitch, ANSI FULL BLEED A (8.50 X 11.00 INCHES)

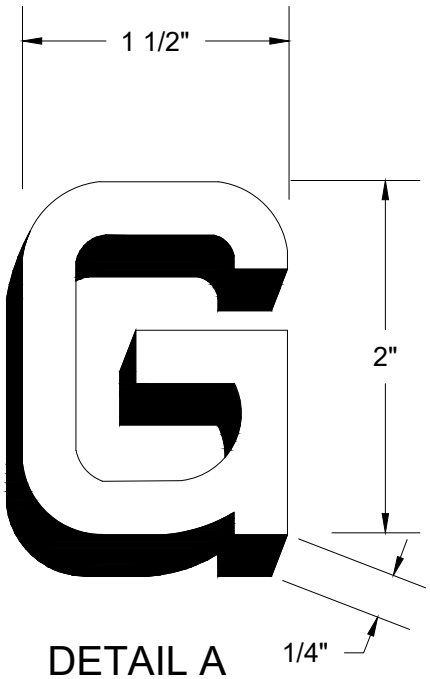

DETAIL A
RAISED TEXT

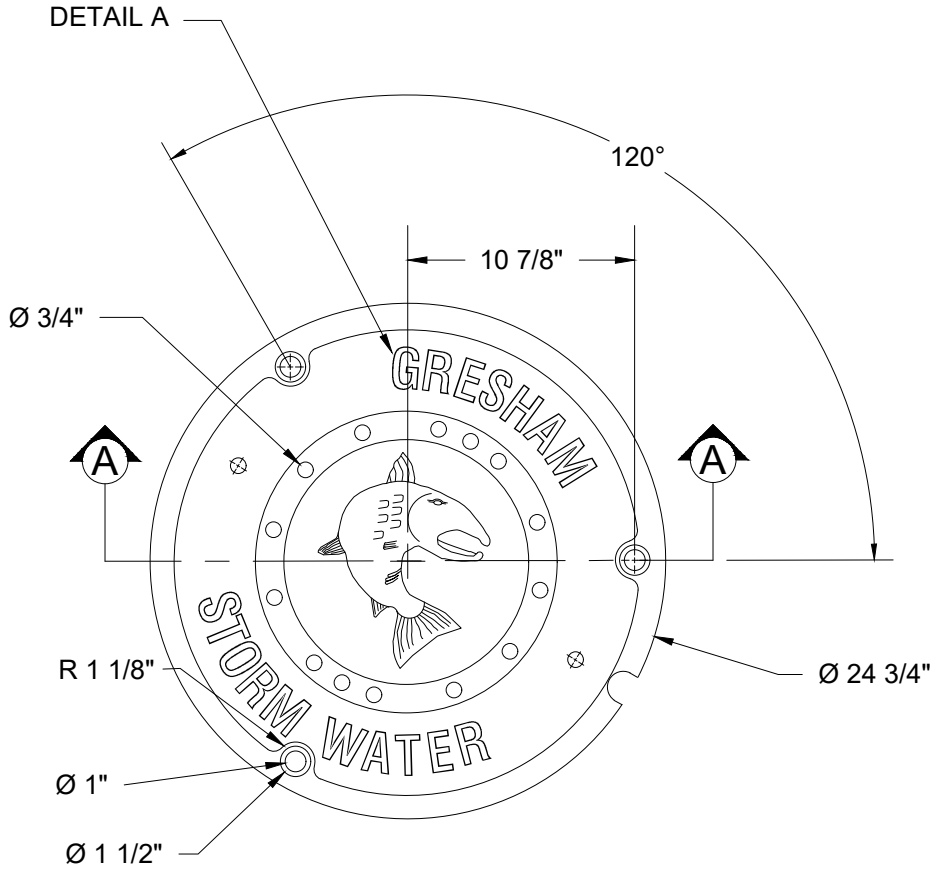

TOP VIEW

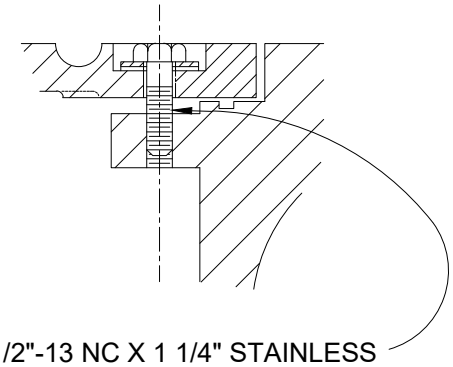

1/2"-13 NC X 1 1/4" STAINLESS STEEL HEX HEAD CAP SCREW W/ 1 1/4" Ø OD X 3/32" THK. 8-18 STAINLESS STEEL WASHER & 3/32" NEOPRENE WASHER, (3) EA. REQUIRED.

LOCK DOWN DETAIL

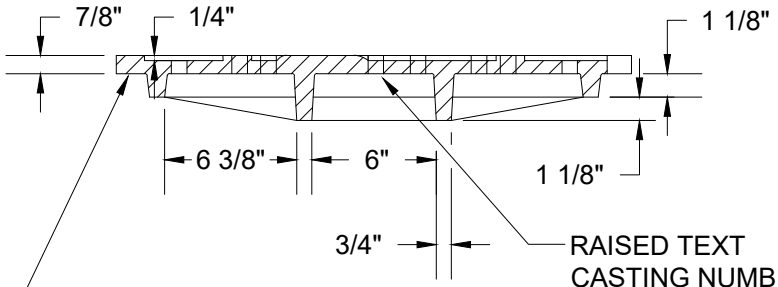

MACHINE TO A TRUE BEARING ALL AROUND.

RAISED TEXT
CASTING NUMBER
CASTING DATE

SECTION A-A

CITY OF GRESHAM

STORMWATER TAMPERPROOF MANHOLE COVER

PWS VERSION: JAN 2020

DRAWN	CMC
REV. DATE	JAN 2019
APPR.	
DETAIL NO.	411

FILENAME: \\gresham.gov\cog\inter-departmental\development engineering projects\public works standards\2.0 pws revision copy\details\400_stormwater\storm cad\411.dwg, Plotted 12/6/2019 3:15 PM, By: Anthony Dollowitch, ANSI FULL BLEED A (8.50 X 11.00 INCHES)

CITY OF GRESHAM

STORMWATER MANHOLE, OFF-ROAD ELEVATED COVER (HINGE)

PWS VERSION: JAN 2020

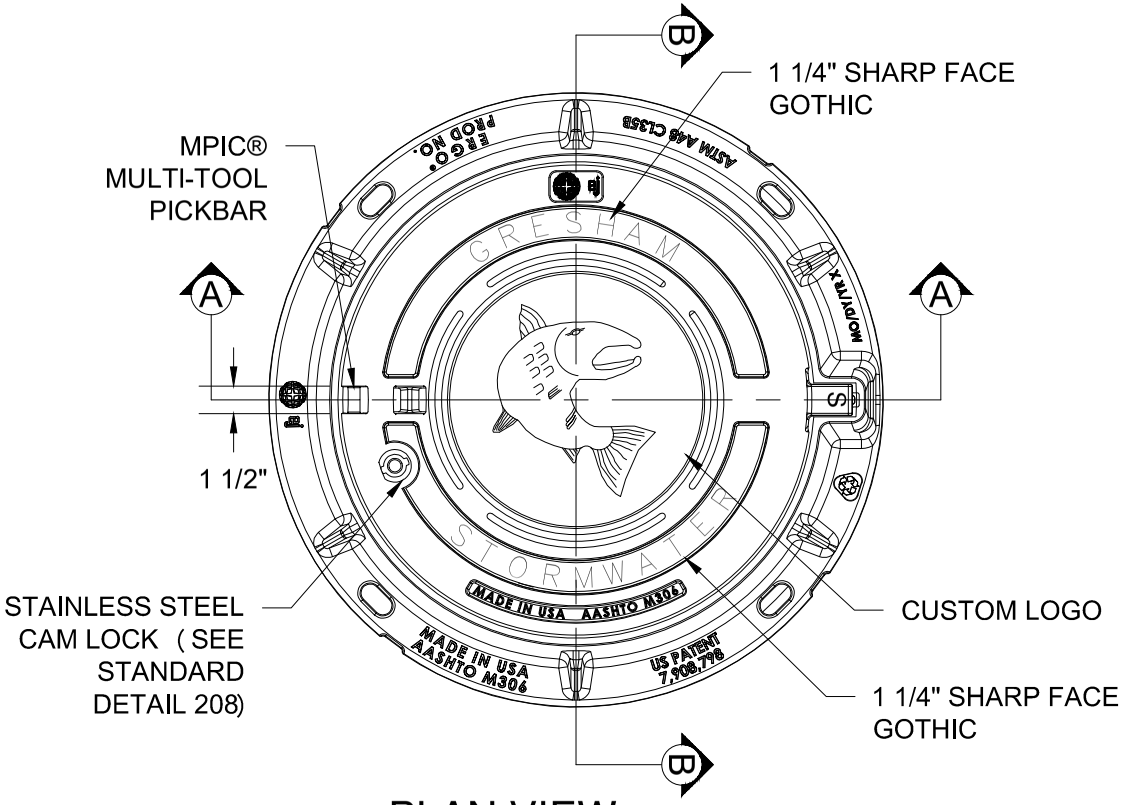

PLAN VIEW

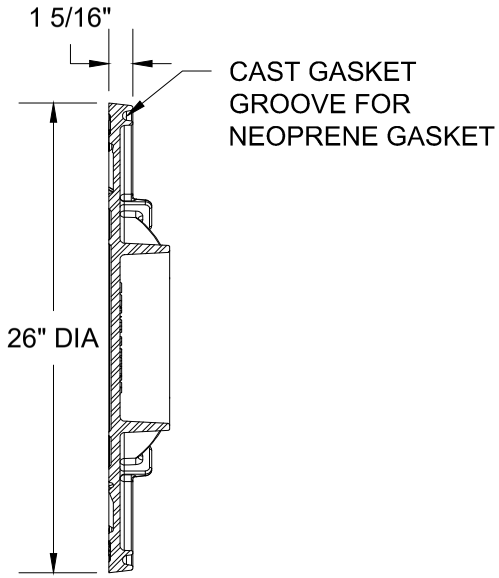

COVER SECTION B-B

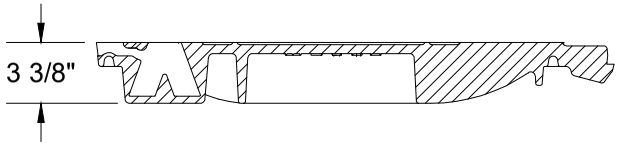

COVER SECTION A-A

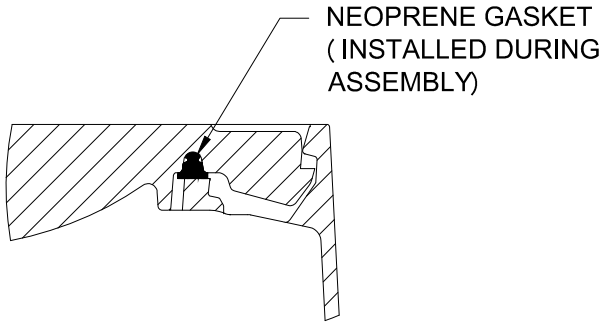

HINGE & GASKET VIEW

DRAWN	KRB
REV. DATE	JAN 2019
APPR.	
DETAIL NO.	412

CITY OF GRESHAM

STORMWATER MANHOLE, OFF-ROAD ELEVATED COVER (PIN)

PWS VERSION: JAN 2020

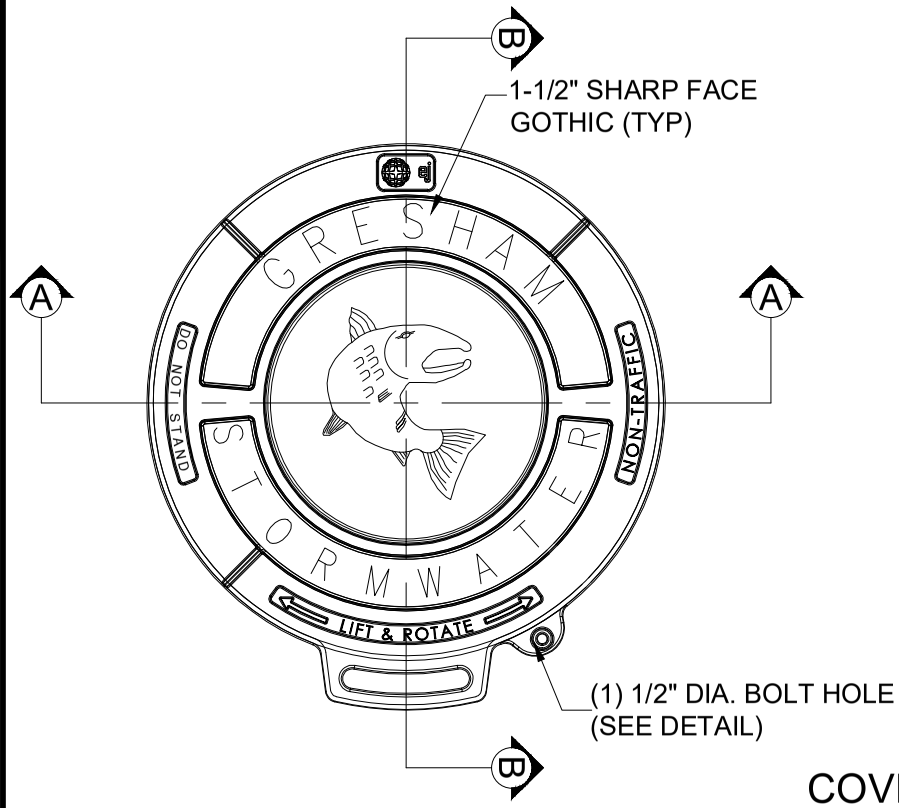

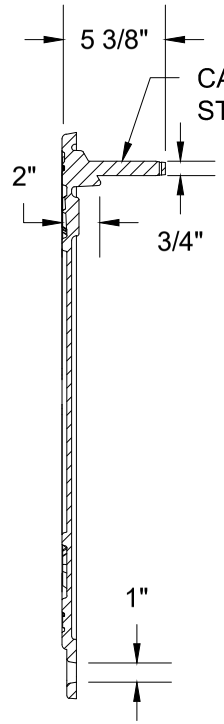

COVER SECTION B-B

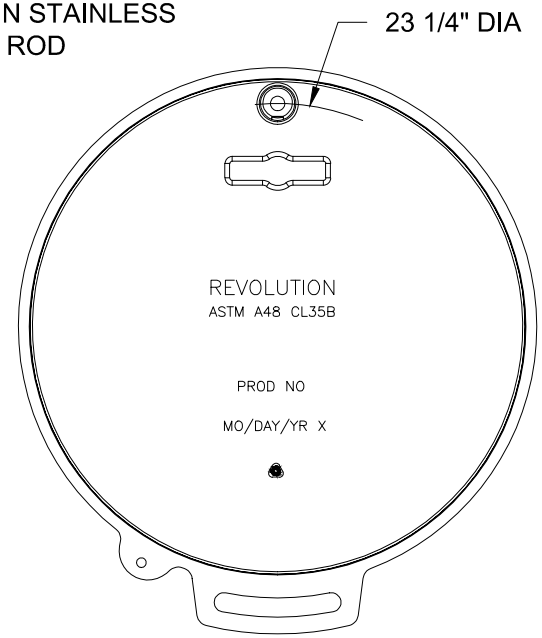

BOTTOM VIEW

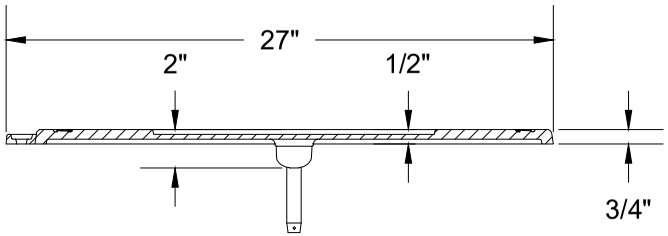

COVER SECTION A-A

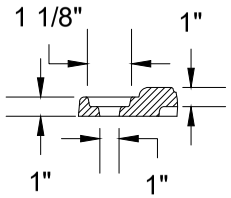

BOLTHOLE DETAIL

DRAWN	KRB
REV. DATE	JAN 2019
APPR.	
DETAIL NO.	413

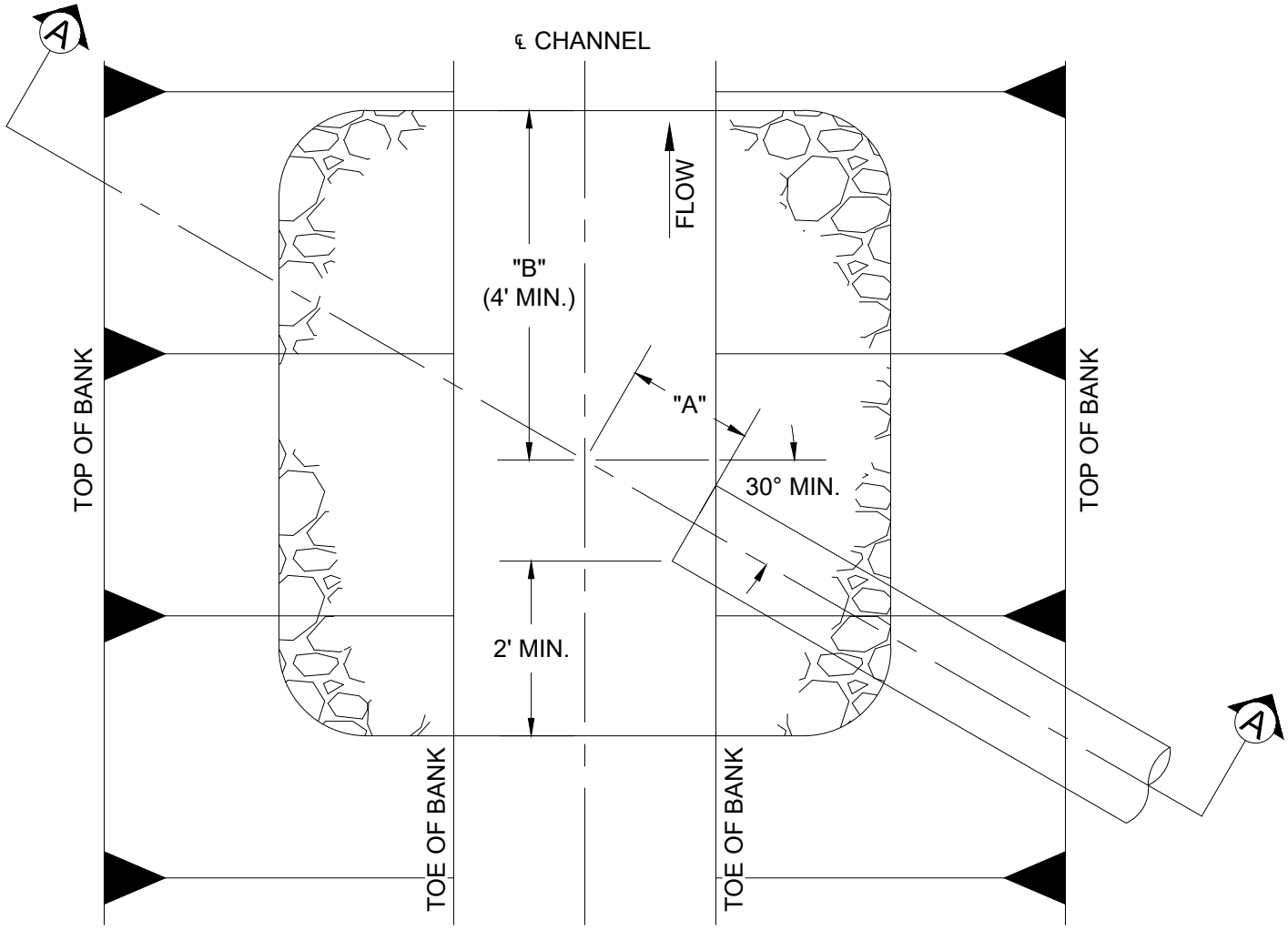

PLAN

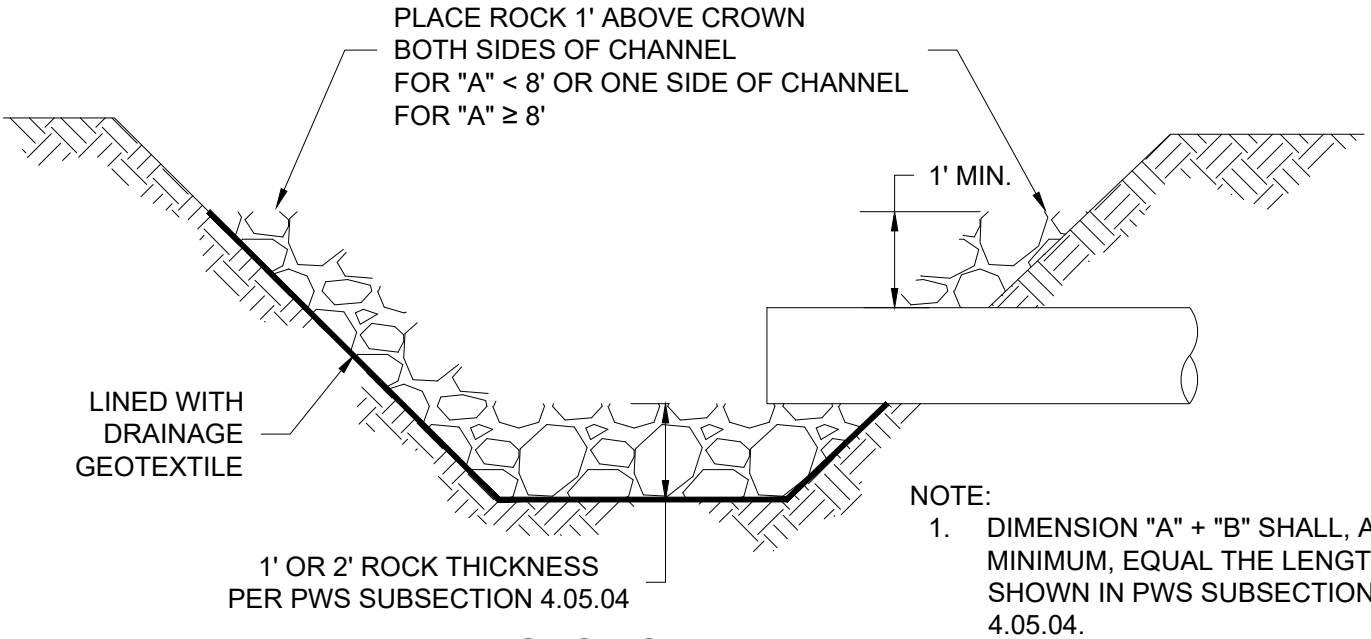

NOTE:

1. DIMENSION "A" + "B" SHALL, AT A MINIMUM, EQUAL THE LENGTH SHOWN IN PWS SUBSECTION 4.05.04.

SECTION A-A

NTS

CITY OF GRESHAM	OUTFALL PROTECTION	DRAWN KRB
		REV. DATE JAN 2019
		APPR.
	PWS VERSION: JAN 2020	DETAIL NO. 414

FILENAME: \\gresham.gov\cog\inter-departmental\development engineering projects\public works standards\2.0 pws revision copy\details\400_stormwater\storm cad\414.dwg, Plotted 12/6/2019 3:19 PM, By: Anthony Dollowitch, ANSI FULL BLEED A (8.50 X 11.00 INCHES)

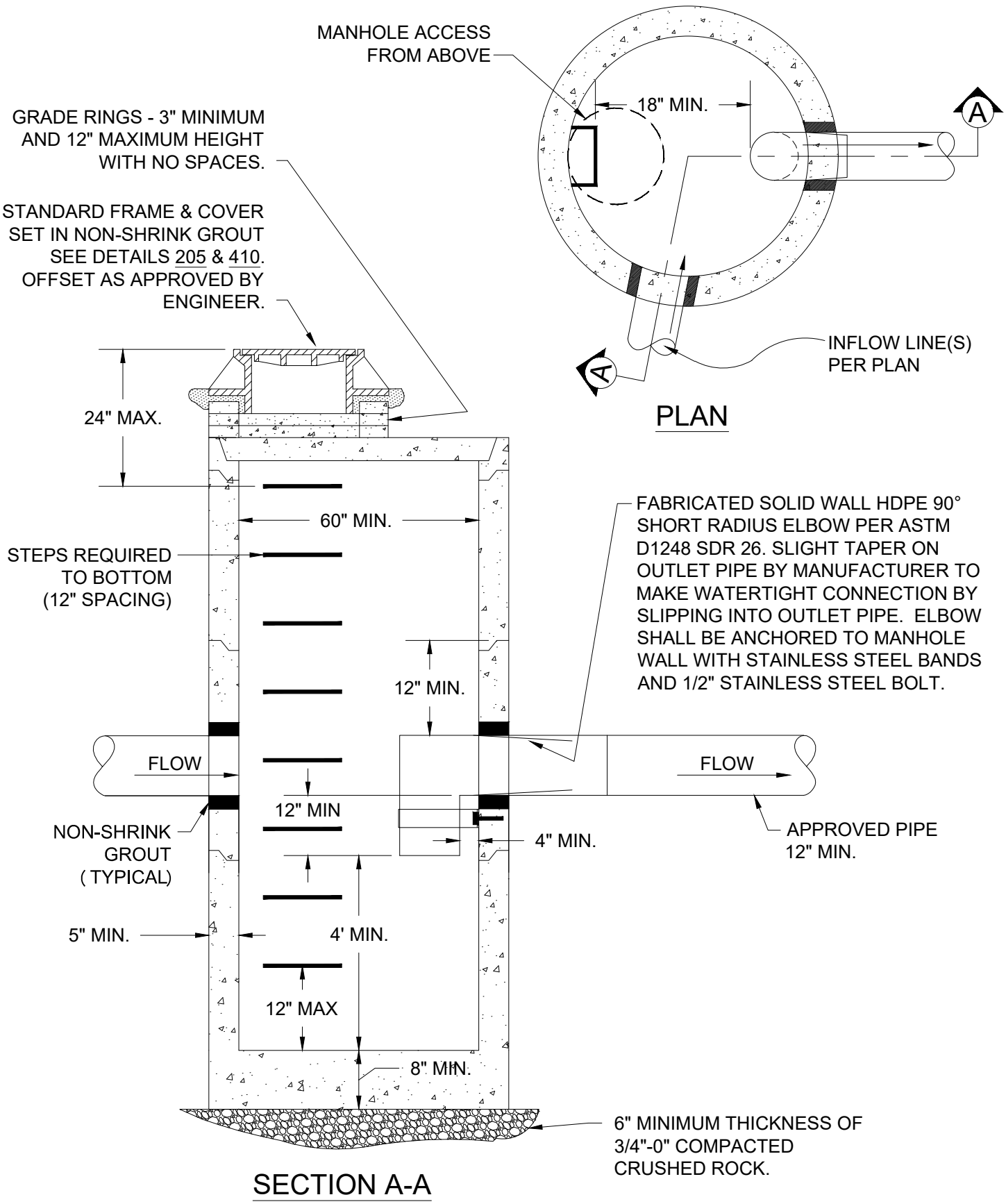

CITY OF GRESHAM

SEDIMENTATION MANHOLE

PWS VERSION: JAN 2020

DRAWN	RMS
REV. DATE	JAN 2020
APPR.	
DETAIL NO.	415

FILENAME: \\gresham.gov\cog\inter-departmental\development engineering projects\public works standards\2.0 pws revision copy\details\400_stormwater\storm cad\415.dwg, Plotted 12/6/2019 3:21 PM, By: Anthony Dollowitch, ANSI FULL BLEED A (8.50 X 11.00 INCHES)