CIVIL EROSION CONTROL 3

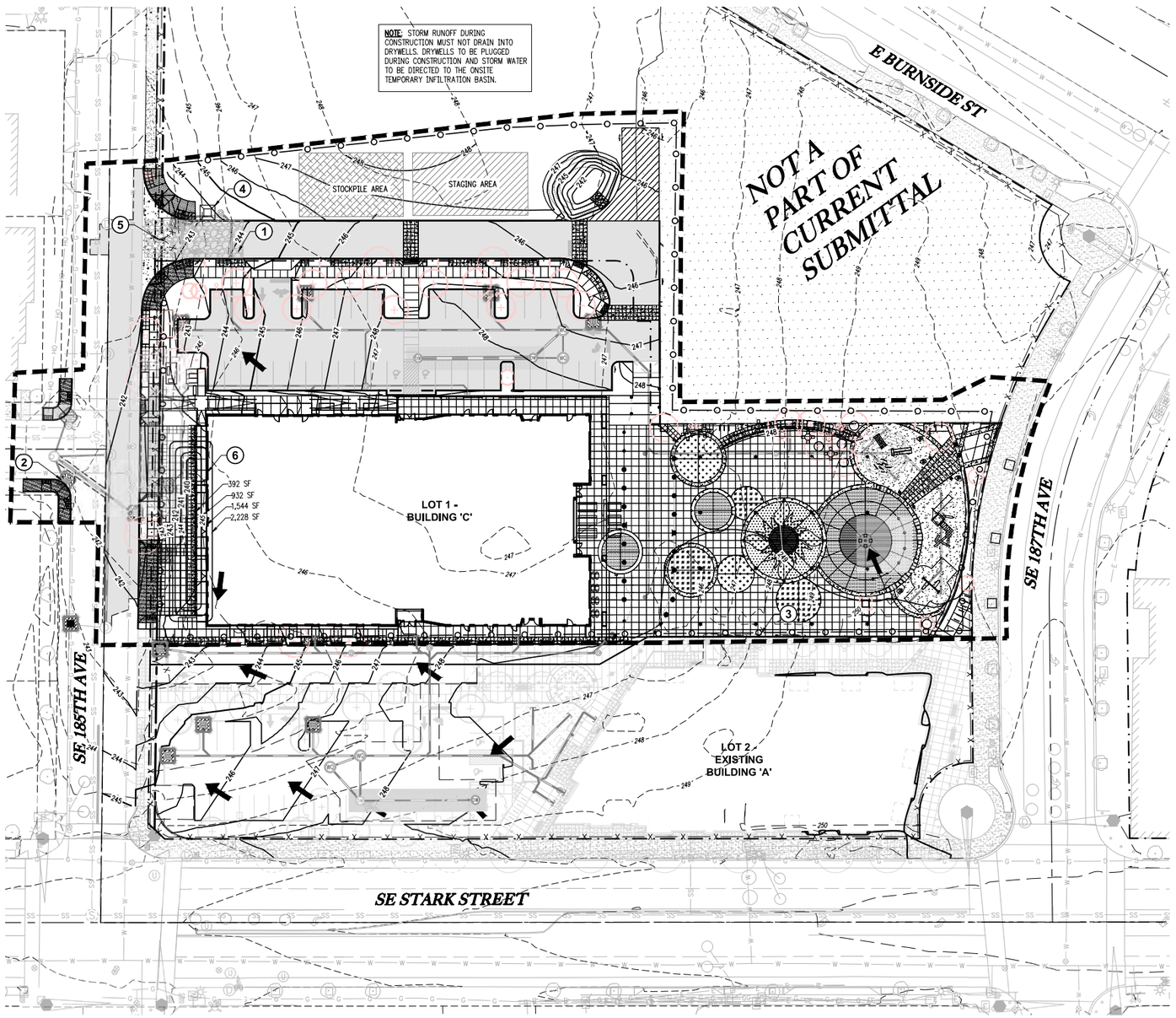

CONSTRUCTION NOTES:

1. INSTALL CONSTRUCTION ENTRANCE PER C.O.G. EPSC-3
2. INSTALL INLET PROTECTION PER C.O.G. EPSC-8A
3. INSTALL SEDIMENT FENCE PER C.O.G. EPSC-4
4. INSTALL CONCRETE WASHOUT PER C.O.G. EPSC-21
5. INSTALL CONSTRUCTION FENCE AND GATE
6. TEMPORARY INFILTRATION BASIN SIZED TO FULLY INFILTRATE THE 2-YEAR 24-HR. STORM EVENT.

INFILTRATION BASIN:

SITE STORM DRAINAGE BASIN AREA: 121,532 SQ.FT. (2.79 ACRES)

INFILTRATION BASIN SURFACE AREA: 2,228 SQ.FT.
INFILTRATION BASIN STORAGE VOLUME: 3,786 CF

NOTE:
THE TEMPORARY BASIN FULLY INFILTRATES THE PEAK FLOW OF THE 2-YEAR 24-HOUR STORM EVENT OF THE ENTIRE SITE. THE INFILTRATION BASIN IS 3 FEET DEEP WITH 3:1 SIDE SLOPE. THERE IS NO OFFSITE FLOW TO THE CITY'S STORM DRAINS OR CONSTRUCTION WATER TO THE PROPOSED UIC'S. AN INFILTRATION RATE OF 20 INCHES PER HOUR WAS OBTAINED FROM GEOTECHNICAL REPORT PROVIDED BY SHANNON & WILSON, INC., ON SEPTEMBER 26, 2016.

EROSION CONTROL NOTES:

1. THE OWNER/PERMITTEE, OR EPSC MANAGER, SHALL BE RESPONSIBLE FOR PROPER INSTALLATION, MONITORING, MAINTENANCE, AND REMOVAL OF ALL EROSION PREVENTION AND SEDIMENT CONTROL MEASURES, IN ACCORDANCE WITH THE CITY, STATE, AND FEDERAL REGULATIONS. RESPONSIBILITY WILL CONTINUE UNTIL PERMANENT VEGETATION OR LANDSCAPE IS COMPLETE. OWNER/PERMITTEE SHALL BE RESPONSIBLE FOR MAINTENANCE UNTIL THE FOLLOWING CONDITIONS ARE MET: 1) THE PROJECT HAS BEEN ACCEPTED BY THE CITY; 2) ALL INDIVIDUAL LOTS ARE SOLD; AND 3) TERMINATION OF THE 1200-C PERMIT BY THE DEPARTMENT OF ENVIRONMENTAL QUALITY (DEQ).
2. APPROVAL OF THE PLAN DOES NOT CONSTITUTE AN APPROVAL OF PERMANENT ROAD OR DRAINAGE DESIGN (E.G., SIZE AND LOCATION OR ROADS, PIPES, RESTRICTORS, CHANNELS, RETENTION FACILITIES, UTILITIES).
3. THE BOUNDARIES OF THE CLEARING LIMITS SHOWN ON A PLAN SHALL BE CLEARLY MARKED IN THE FIELD PRIOR TO CONSTRUCTION. DURING THE CONSTRUCTION PERIOD, NO DISTURBANCE BEYOND THE CLEARING THE CITY OF GRESHAM REQUIRES THAT ALL PROJECTS INCLUDE AN EPSC PLAN. PROJECTS OVER 20 ACRES MUST INCLUDE A PLAN PREPARED BY A REGISTERED ENGINEER. ALL OTHER DEVELOPMENT EPSC PLANS LIMITS SHALL BE PERMITTED. THE MARKINGS SHALL BE MAINTAINED BY THE OWNER/PERMITTEE OR DESIGNEE FOR THE DURATION OF CONSTRUCTION.
4. THE EPSC BMPS SHOWN ON THE PLAN MUST BE CONSTRUCTED IN CONJUNCTION WITH ALL CLEARING AND GRADING ACTIVITIES, IN ACCORDANCE WITH THE CONDITIONS OF APPROVAL, PUBLIC WORKS STANDARDS, DEVELOPMENT CODE, AND IN SUCH A MANNER AS TO ENSURE THAT SEDIMENT, SEDIMENTINLADEN WATER, AND OTHER POLLUTANTS DO NOT ENTER THE DRAINAGE SYSTEM OR ROADWAYS, OR VIOLATE APPLICABLE WATER QUALITY STANDARDS.
5. THE EPSC BMPS SHOWN ON THE PLAN ARE MINIMUM REQUIREMENTS FOR ANTICIPATED SITE CONDITIONS. DURING THE CONSTRUCTION PERIOD, THE BMPS SHALL BE UPGRADED AS NEEDED FOR UNEXPECTED STORM EVENTS AND TO ENSURE THAT SEDIMENT AND SEDIMENT LADEN WATER DO NOT LEAVE THE SITE.
6. THE EPSC BMPS SHALL BE INSPECTED DAILY DURING STORMWATER AND SNOWMELT RUNOFF AND AT LEAST ONCE EVERY SEVEN (7) CALENDAR DAYS AND WITHIN 24 HOURS AFTER ANY STORM EVENT THAT PRODUCES AT LEAST ½OF AN INCH OF RAIN PER 24-HOUR PERIOD. ON INACTIVE PERIODS OF GREATER THAN SEVEN (7) CONSECUTIVE CALENDAR DAYS, INSPECTIONS ARE REQUIRED EVERY TWO (2) WEEKS.
7. AT NO TIME SHALL SEDIMENT BE ALLOWED TO ACCUMULATE MORE THAN ONE-THIRD THE HEIGHT OF ANY SEDIMENT CONTROL BARRIER. TRAPPED SEDIMENTS SHALL BE REMOVED FROM CATCH BASINS WHEN DESIGN CAPACITY HAS BEEN REDUCED BY 50 PERCENT. ALL CATCH BASINS AND CONVEYANCE LINES SHALL BE CLEANED PRIOR TO PROJECT FINAL INSPECTION. THE CLEANING OPERATION SHALL NOT FLUSH OR INTENTIONALLY WASH SEDIMENT-LADEN WATER INTO THE DOWNSTREAM STORMWATER SYSTEM, STREAMS OR DRAINAGE WAYS.
8. SEDIMENT THAT LEAVES THE SITE SHALL BE CLEANED UP WITHIN 24 HOURS AND PLACED BACK ON THE SITE OR PROPERLY DISPOSED. ANY IN-STREAM CLEAN UP OF SEDIMENT SHALL BE PERFORMED ACCORDING TO REQUIREMENTS OF THE U.S. ARMY CORPS OF ENGINEERS AND THE OREGON DEPARTMENT OF STATE LANDS.
9. STORM DRAIN INLETS, CATCH BASINS, AND AREA DRAINS SHALL BE PROTECTED UNTIL PAVEMENT SURFACES ARE COMPLETED AND PERMANENT VEGETATION HAS BEEN ESTABLISHED.
10. STABILIZED GRAVEL ENTRANCES SHALL BE INSTALLED AT THE BEGINNING OF CONSTRUCTION AND MAINTAINED FOR THE DURATION OF THE PROJECT. ADDITIONAL MEASURES MAY BE REQUIRED TO ENSURE THAT ALL PAVED AREAS ARE KEPT CLEAN FOR THE DURATION OF THE PROJECT.
11. CONCRETE WASHOUT LOCATION SHALL BE PROVIDED FOR WASHING OF CONCRETE TRUCKS AND EQUIPMENT SO THAT CONCRETE SLURRY IS NOT WASHED INTO THE STORMWATER SYSTEM, STREAMS, OR DRAINAGE WAYS. IDENTIFY THE LOCATION ON THE PLAN AND INCLUDE THE NOTE: "DO NOT OVERFILL AND BURY WHEN FINISHED."
12. GROUNDCOVER AND/OR SEEDING SHALL BE COMPLETED AS SOON AS PRACTICABLE FOR EACH PHASE OF CONSTRUCTION AND NOT LATER THAN SEPTEMBER 1. IF FERTILIZERS ARE USED TO ESTABLISH VEGETATION, THE APPLICATION RATES SHALL FOLLOW MANUFACTURER'S GUIDELINES AND THE APPLICATION SHALL BE PERFORMED IN SUCH A WAY TO MINIMIZE NUTRIENT-LADEN RUNOFF TO RECEIVING WATERS. THE PLAN SHALL STATE THE CONDITIONS FOR DETERMINING SUCCESSFUL VEGETATION ESTABLISHMENT.
13. NON-STORMWATER POLLUTANT CONTROL MEASURES INCLUDING ANY USE OF TOXIC OR OTHER HAZARDOUS MATERIALS SHALL INCLUDE PROPER STORAGE, SPILL CONTAINMENT, APPLICATION, AND DISPOSAL. ALL OTHER DEVELOPMENT EPSC PLANS
14. WET WEATHER MEASURES SHALL BE ESTABLISHED BY OCTOBER 1ST AND CONTINUE TO FUNCTION THROUGH MAY 31ST OF THE FOLLOWING YEAR. PRIOR TO DISCONTINUING ACTIVITIES ON ANY PORTION OF THE SITE BETWEEN OCTOBER 1 AND MAY 31, ANY EXPOSED AREA SHALL BE STABILIZED WITHIN 7 DAYS TO PREVENT EROSION. BETWEEN JUNE 1 AND SEPTEMBER 30, THE SITE MUST BE STABILIZED WITHIN 30 DAYS. STABILIZATION MAY OCCUR BY APPLYING APPROPRIATE COVER (E.G., MULCH, EROSION CONTROL BLANKETS, BINDERS, TACKIFIERS) OR ESTABLISHING ADEQUATE VEGETATIVE COVER.
15. PRIOR TO FINAL PROJECT ACCEPTANCE BY THE CITY, THE SITE SHALL BE PERMANENTLY STABILIZED (SEED AND MULCH OR TACKIFIER, OR PERMANENT LANDSCAPING). SEE APPENDIX F: CITY OF GRESHAM NATIVE PLANT RESTORATION GUIDE AS A RESOURCE. FOR SUBDIVISIONS, TEMPORARY GROUNDCOVER WILL BE ACCEPTED IF HOME CONSTRUCTION WILL BEGIN WITHIN 30 DAYS OF PROJECT FINALIZATION.
16. THE OWNER/PERMITTEE IS RESPONSIBLE FOR REMOVING ALL SEDIMENT CONTROL MEASURES ONCE PERMANENT STABILIZATION HAS BEEN ESTABLISHED. DEQ WILL NOT TERMINATE THE 1200-C PERMIT UNTIL PERMANENT VEGETATION IS ESTABLISHED.

LEGEND

- SILTSACK-LINED CATCH BASIN
- 99 — EXISTING MINOR CONTOUR
- 100 — EXISTING MAJOR CONTOUR
- 99 — PROPOSED MINOR CONTOUR
- 100 — PROPOSED MAJOR CONTOUR
- SS — EXISTING SANITARY SEWER LINE
- SD — EXISTING STORM DRAIN LINE
- D — EXISTING DRYWELL
- G — EXISTING GAS LINE
- W — EXISTING WATER LINE
- OH — EXISTING OVERHEAD UTILITIES LINE
- COM — EXISTING COMMUNICATIONS LINE
- E — EXISTING ELECTRIC LINE
- SILT FENCE
- X — CONSTRUCTION FENCE
- LIMITS OF CONSTRUCTION
- FLOW ARROW
- STAGING AREA
- STOCKPILE AREA, WITH PLASTIC SHEETING AS NECESSARY DURING WET WEATHER
- CONSTRUCTION ENTRANCE
- CONCRETE TRUCK WASHOUT
- WQ — PROPOSED WATER QUALITY MANHOLE
- DW — PROPOSED DRYWELL

30' 0 15' 30' 60'
SCALE: 1" = 30'

ROCKWOOD RISING SOUTH
TAX LOT 07904
TAX MAP 1N 3E 32CC
SW1/4 SW1/4 SEC.32 T.1N.R.3E.W.M.
GRESHAM, OREGON

GRADING EROSION & SEDIMENT CONTROL PLAN

CITY OF GRESHAM PROJECT # 072654

REVISIONS

NO.	DATE	DESCRIPTION
0	03/16/20	1ST PR SET SUBMITTAL
1		
2		
3		
4		

EMERIO Design
6445 SW FALLBROOK PLACE, SUITE 100
BEAVERTON, OREGON 97008
PHONE: (503) 626-6622
FAX: (503) 639-9592
www.emeriodesign.com

REGISTERED PROFESSIONAL ENGINEER
34085
Date Signed
Eric Evans
OREGON JANUARY 14, 2003
ERIC DANIEL EVANS
EXPIRES: 12/31/2020

SHEET
EC3
OF
EC4

FILE:P:\203-005 Rockwood N\dwg\civ\Building C\203-005_ec3, Layout: EC3 GRADING EROSION & SEDIMENT CONTROL PLAN, Plot Date: 3/16/2020 3:13 PM, by: Tyler Korb

CIVIL EROSION CONTROL 4

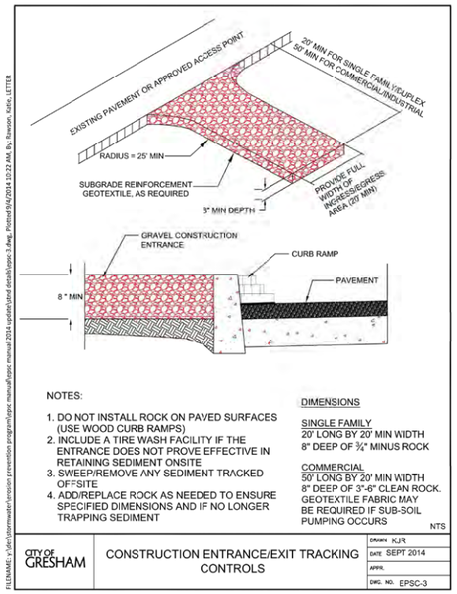

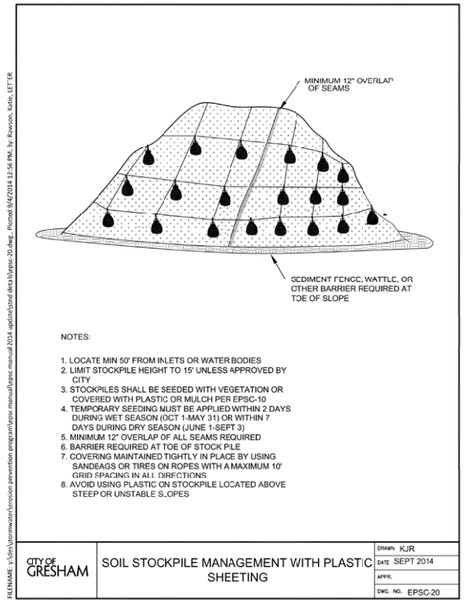

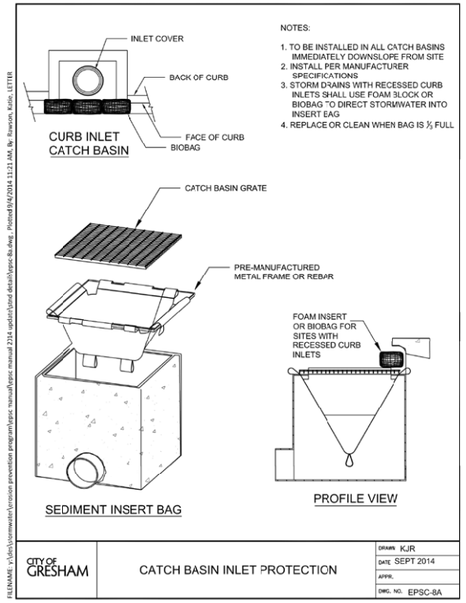

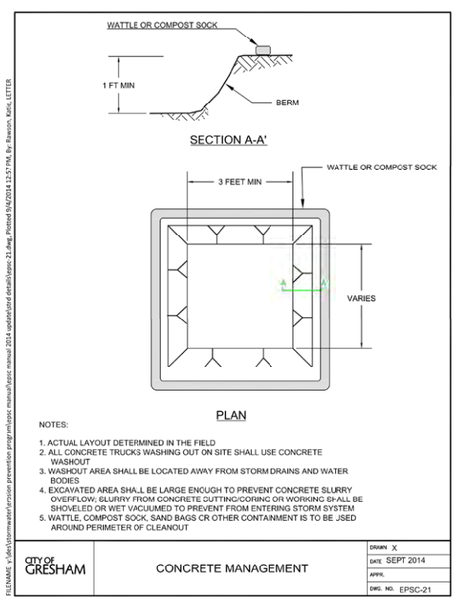

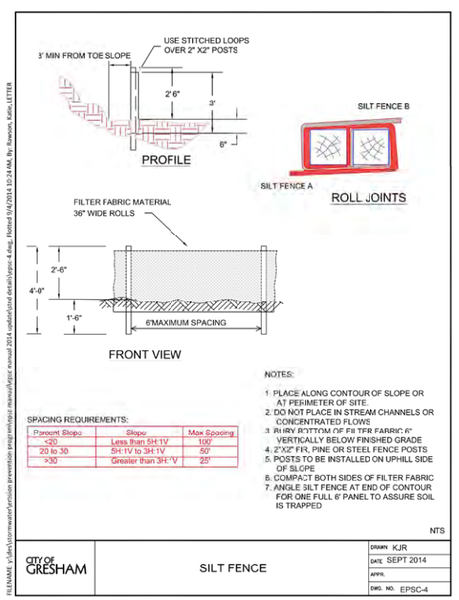

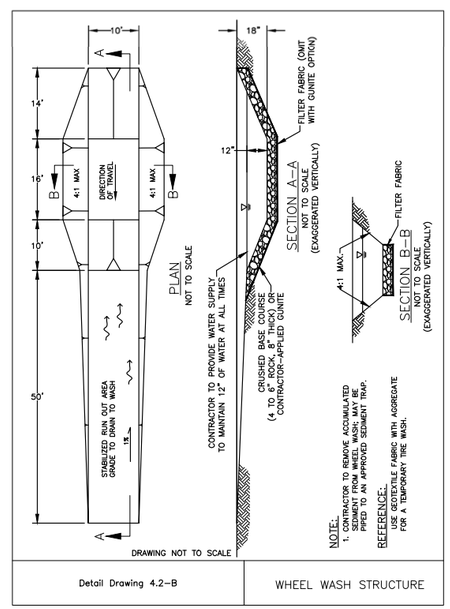

ROCKWOOD RISING SOUTH
TAX LOT 07904
TAX MAP 1N 3E 32CC
SW1/4 SW1/4 SEC.32 T.1N.R.3E.W.M.
GRESHAM, OREGON

EROSION AND SEDIMENT CONTROL DETAILS

CITY OF GRESHAM PROJECT # 072654

REVISIONS

NO.	DATE	DESCRIPTION
0	03/16/20	1ST DR SET SUBMITTAL
1		
2		
3		
4		

EMERIO Design
6445 SW FALLBROOK PLACE, SUITE 100
BEAVERTON, OREGON 97008
TEL: (503) 626-8603
FAX: (503) 639-9592
www.emeriodesign.com

REGISTERED PROFESSIONAL ENGINEER 54865 OREGON ERIC DANIEL EVANS

SHEET EC4 OF EC4

FILE:P:\203-005 Rockwood N\dwg\civ\Building C\203-005_ec4, Layout: EC4 EROSION & SEDIMENT CONTROL DETAILS, Plot Date: 3/16/2020 3:14 PM, by: Tyler Korb

Appendix C - Electrical Design

SITE LIGHTING DIAGRAM

- LED BOLLARD (SL5)
- PEDESTRIAN LIGHT POLE (1-HEAD) (SL2.1)
- PARKING LIGHT POLE (1-HEAD) (SL2)
- PARKING LIGHT POLE (1-HEAD) (SL2.1HS)
- PARKING LIGHT POLE (2-HEAD) (SL2.2)
- PEDESTRIAN LIGHT POLE (SL3)
- PEDESTRIAN LIGHT POLE (SL3.1)
- FLOODLIGHT SYMMETRICAL LED (SL4)
- EXISTING LIGHT

SL1 - CYCLONE LIGHTING - SY21P1

SL2/SL2.1/SL2.1HS/SL2.2 - LITHONIA LIGHTING - DSX1

SL3/SL3.1 - SELUX LIGHTING - SAC2L

SL4 - LIGMAN LIGHTING - UMI-50433

SL5 - SELUX LIGHTING - BRMFL

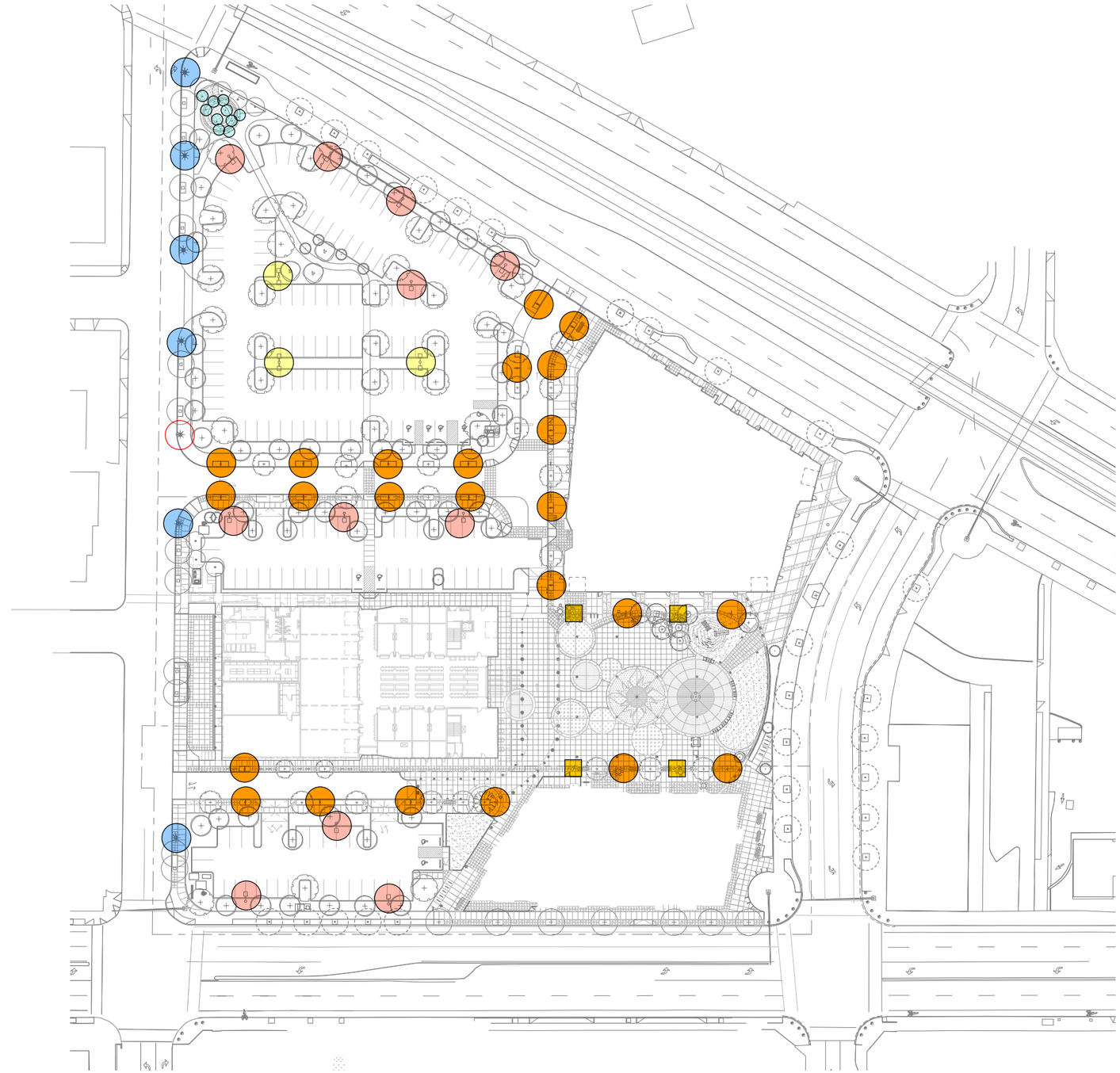

N

0 80' 160'

PHOTOMETRIC PLAN
OVERALL SITE

Schedule							
Label	QTY	Catalog Number	Description	Lamp	Lumens per Lamp	LLF	Watt
SL2	6	DSX1 LED 30C 1000 40K T2M MVOLT	DSX1 LED with 30 LEDs @ 1000 mA, 4000K , TYPE 2 MEDIUM OPTICS	LED	11176	0.95	105
SL3	23	SAC2L-1-LG3700-R5-50-120	Saturn 2 Cutoff LED	(5 Clusters of 30 LED's) White 50W SSL c/w Advance Driver XITANIUM 100W 0.35A/0.53A/0.70A @ 120.00V	5045	0.95	67.19
SL4	28	UMI-50433-M-W40	MIC 6 LARGE FLOODLIGHT SYMMETRICAL LED	LED	3718	0.95	51
SL5	4	BRMFL-4-4L35-35-120 DCC-DV	DECORATIVE BOLLARD	LED	2182	0.95	29.97
S2	40	MR13FL-PP-MW-20L40K-DCC-DV	SURFACE MOUNT	LED	3964	0.95	23.6
S5	16	RD150-10-NW-LED-UE	PENDANT MOUNT	LED	3964	0.95	11.4
S7	12	OLW 31	LED GENERAL PURPOSE WALL-MOUNT LUMINAIRE WITH TYPE III OPTICS	LED	3964	0.95	44.2
S9	7	4451 LED WHT41 MFL LLV	STEP LIGHT	LED	3964	0.95	14.8
F8	48	LDN4SQ 35/20 LS4AR LSS	4IN LDN SQUARE, 3500K, 2000LM, CLEAR, SEMI-SPECULAR REFLECTOR, CRI80	LED	1657	0.95	22.12
F12	6	TFX2 LED 40K MVOLT	TFX2 LED FLOODLIGHT 12,700lm	LED	12827	0.95	93.1

Statistics						
Description	Avg	Max	Min	Max/Min	Avg/Min	Symbol
Rockwood Site	3.0 fc	25.3 fc	0.3 fc	84.3:1	10.0:1	+

NOTE: SEE SHEETS C-4 & C-5 FOR ENLARGED PHOTOMETRIC PLANS

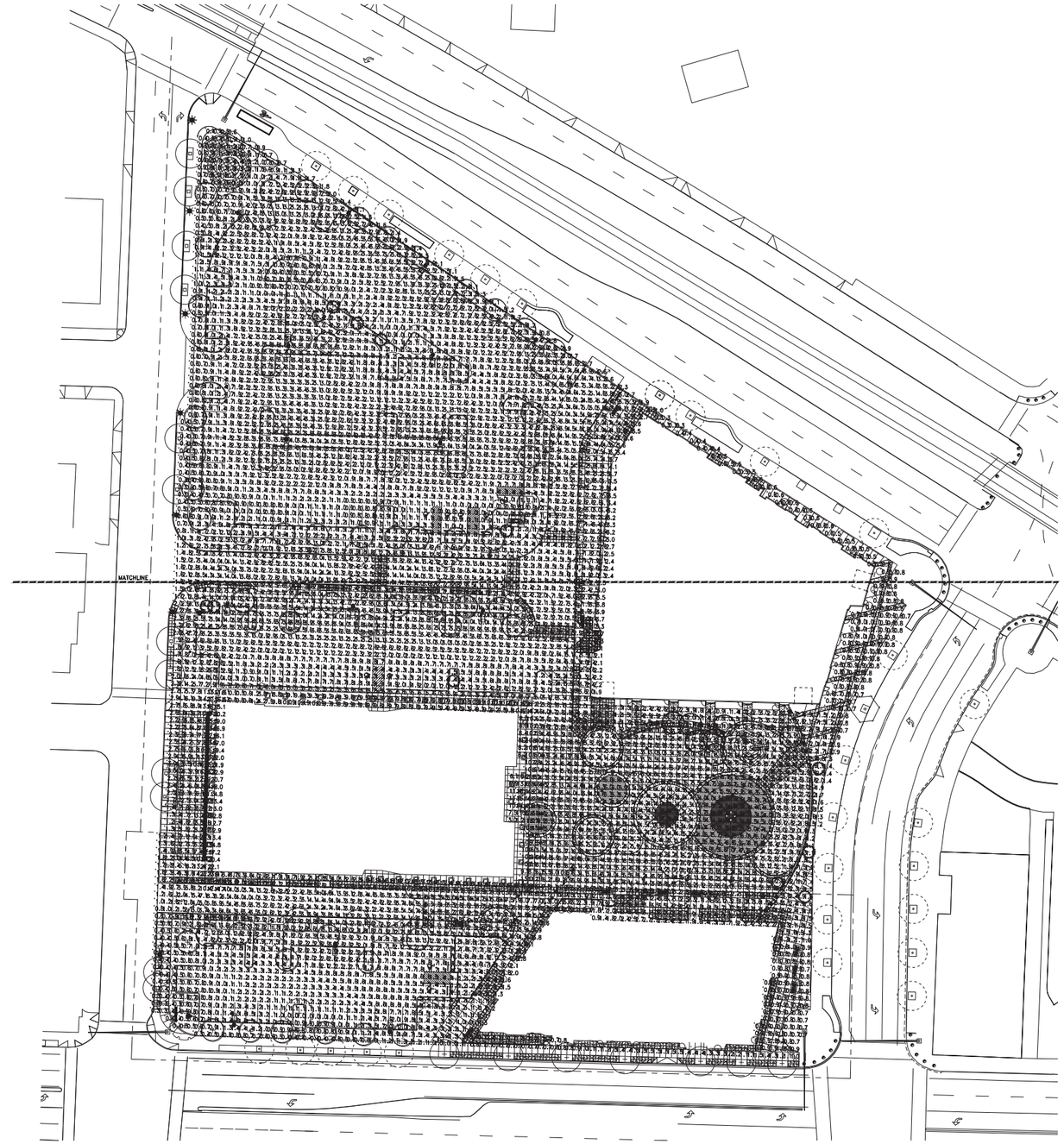

N

0 80' 160'

ENLARGED PHOTOMETRIC PLAN
NORTH

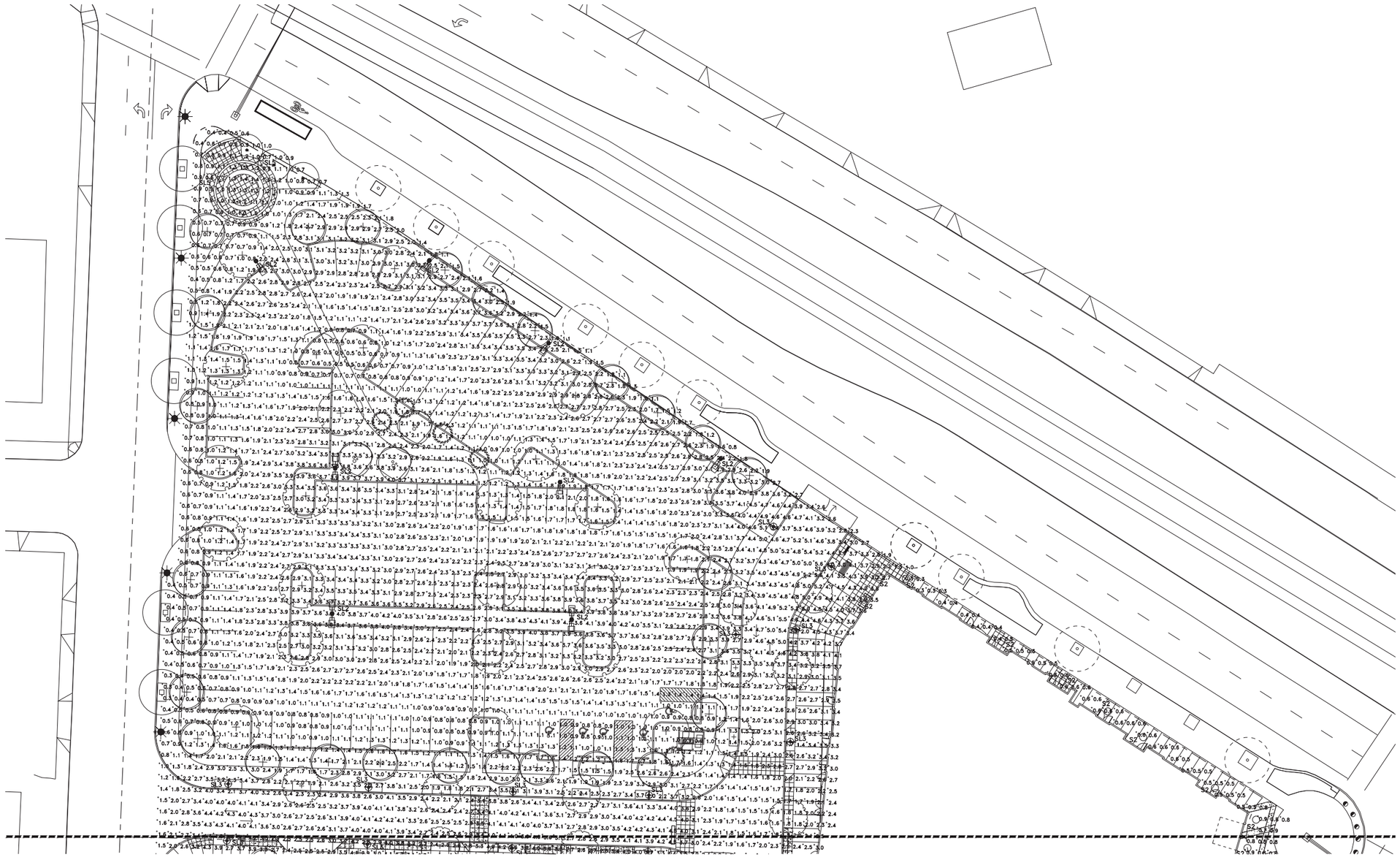

N

0 40' 80'

ENLARGED PHOTOMETRIC PLAN
SOUTH

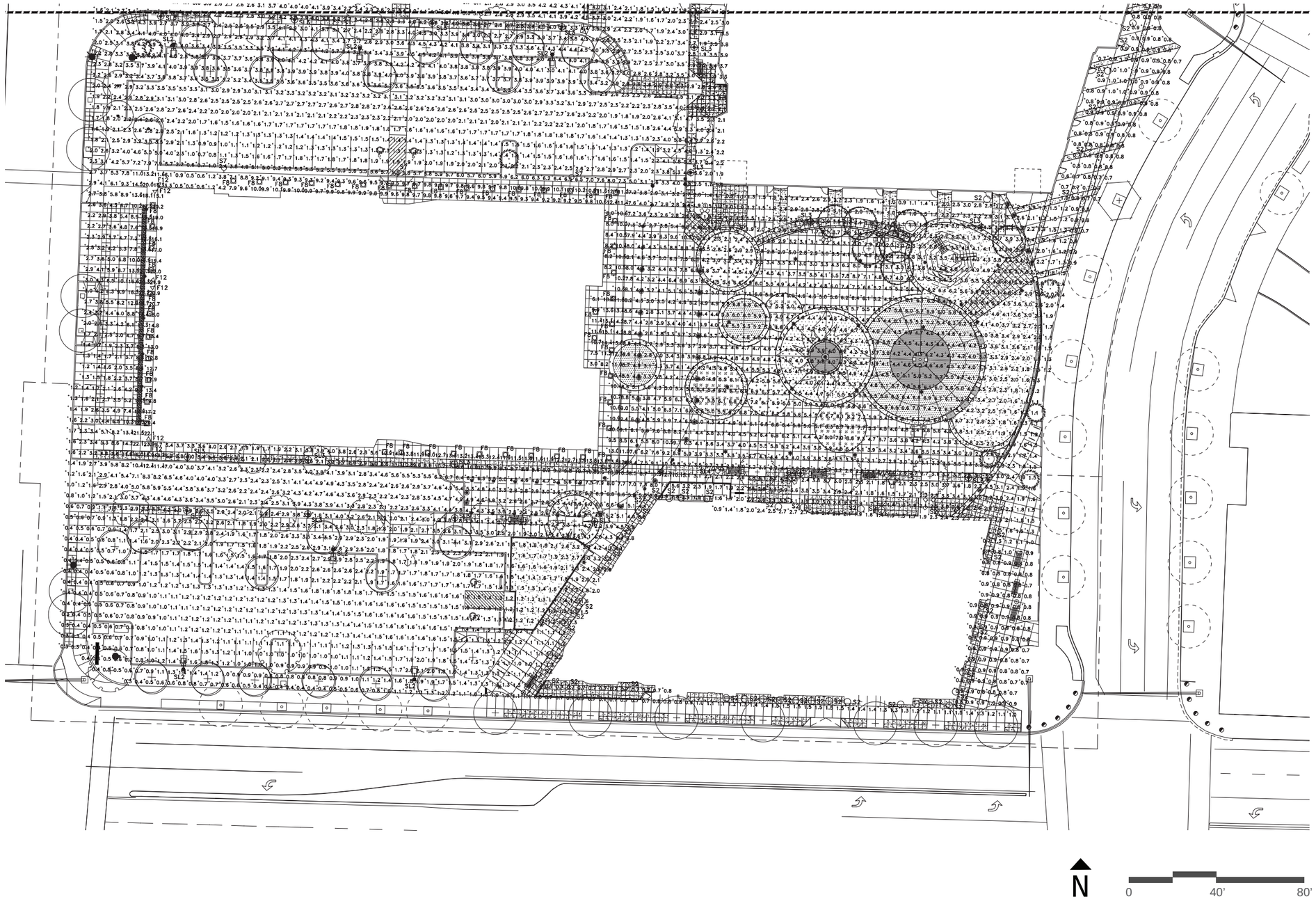

YBA
architects
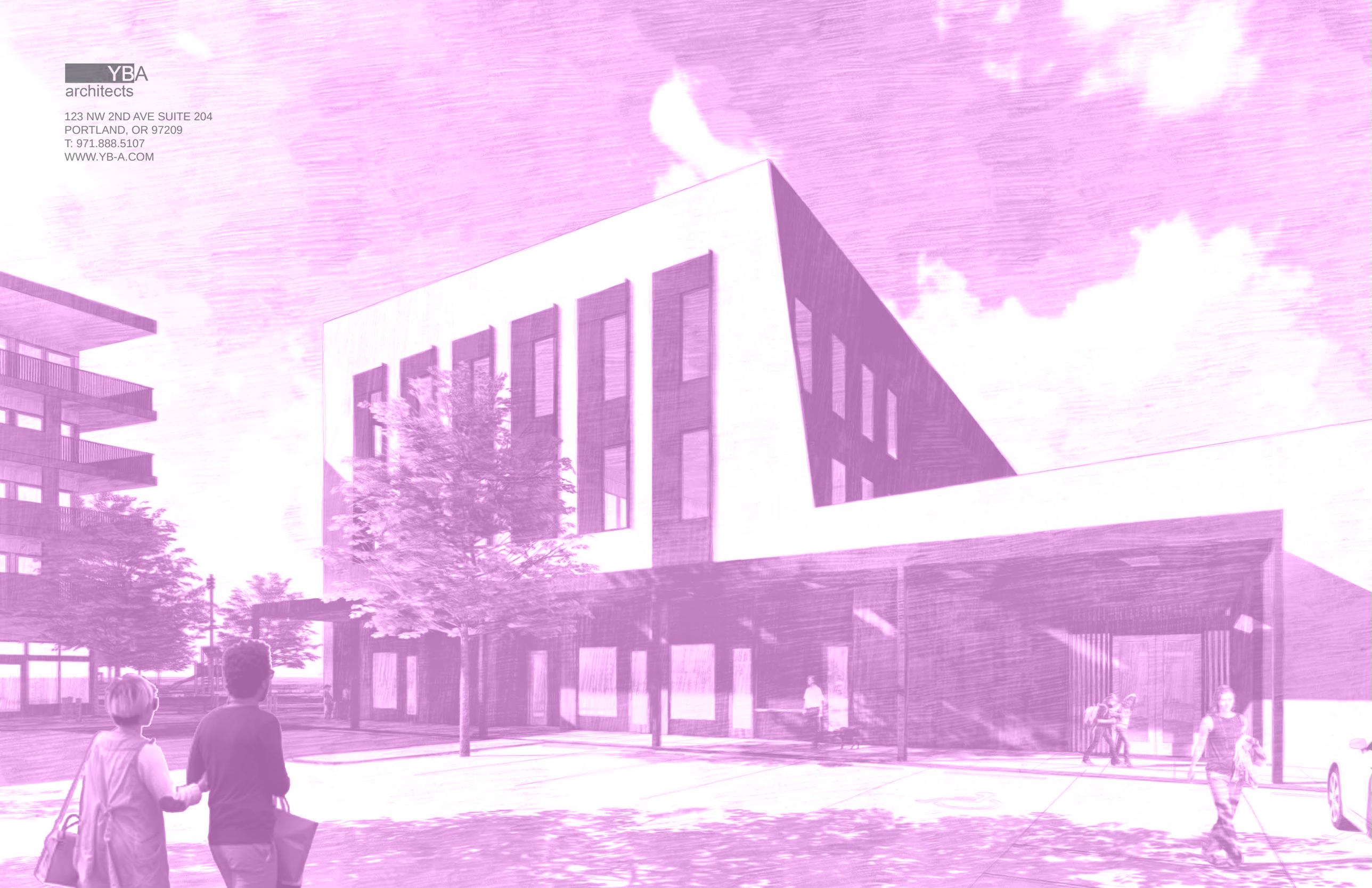
123 NW 2ND AVE SUITE 204
PORTLAND, OR 97209
T: 971.888.5107
WWW.YB-A.COM