CIVIL SIGNAGE & STRIPING PLAN

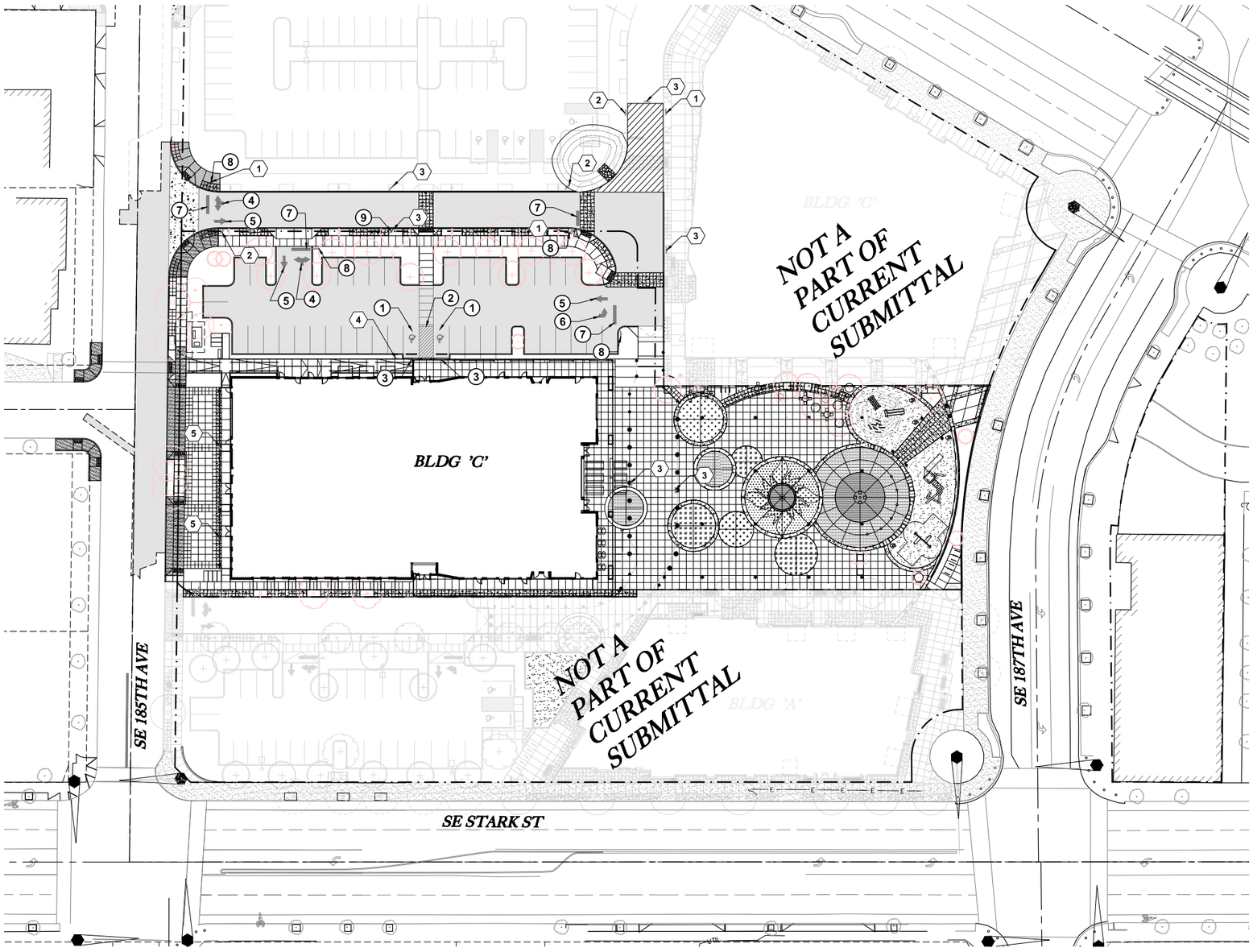

30' 0 15' 30' 60'
SCALE: 1" = 30'

CONSTRUCTION NOTES:

1. INSTALL ACCESSIBLE PARKING (9' MIN.) PER 2012 OREGON TRANSPORTATION COMMISSION STANDARDS
2. INSTALL ACCESS AISLE (8' MIN.) PER 2012 OREGON TRANSPORTATION COMMISSION STANDARDS
3. INSTALL ACCESSIBLE PARKING SIGN PER 2012 OREGON TRANSPORTATION COMMISSION STANDARDS
4. INSTALL THERMO PLASTIC DUAL TURN ARROW PER DETAIL 3/SHT11
5. INSTALL THERMO PLASTIC IN ARROW PER DETAIL 3/SHT11
6. INSTALL LEFT TURN ARROW PER DETAIL 3/SHT11
7. INSTALL STOP BAR
8. INSTALL STOP SIGN PER MUTCD STANDARD ON STANDARD SIGN POST PER C.O.G. DETAIL 640/SHT12
9. INSTALL "NO PARKING FIRE LANE" SIGNS (TYP.) PER DETAILS THIS SHEET

PERMANENT FIRE SIGNAGE (NTS):

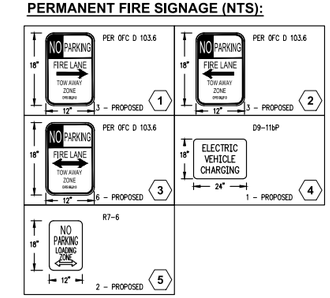

ROCKWOOD RISING SOUTH
TAX LOT 07904
TAX MAP 1N 3E 32CC
SW1/4 SW1/4 SEC.32 T.1N.R.3E.W.M.
GRESHAM, OREGON

SIGNAGE AND STRIPING PLAN

CITY OF GRESHAM PROJECT # 072654

REVISIONS

NO.	DATE	DESCRIPTION
0	03/16/20	1ST DR SET SUBMITTAL
1		
2		
3		
4		

EMERIO Design
6445 SW FALLBROOK PLACE, SUITE 100
BEAVERTON, OREGON 97008
TEL: (503) 641-8672
FAX: (503) 639-9592
www.emeriodesign.com

REGISTERED PROFESSIONAL ENGINEER
OREGON
DocuSigned by: Eric Evans
ERIC DANIEL EVANS
EXPIRES: 12/31/2020

SHEET 009 OF 018

FILE:P:\203-005 Rockwood N\dwg\civ\Building C\203-005_009sign, Layout: 009 SIGNAGE AND STRIPING PLAN, Plot Date: 3/16/2020 3:10 PM, by: Tyler Korb

CIVIL PRIVATE CONSTRUCTION DETAILS

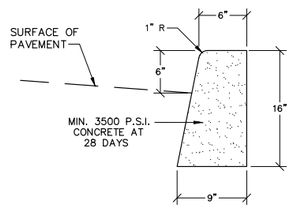

NOTES:

1. EXPANSION JOINTS SHALL BE PROVIDED AT EACH POINT OF TANGENCY OF THE CURB. MATERIAL SHALL BE PRE-MOLDED, NON-EXTRUDING, WITH A MIN. THICKNESS OF 1/2".
2. CONTRACTION JOINTS SHALL BE A MINIMUM OF 2" DEEP & SPACED A MAXIMUM OF 15 FT. APART.
3. BASE ROCK – 1-1/2" MINUS, COMPACTED TO 95% AASHTO T-180 – SHALL BE TO SUBGRADE OF STREET STRUCTURE OR 4" IN DEPTH, WHICHEVER IS GREATER.

1 STANDARD 6" VERTICAL CURB - DETAIL
NTS

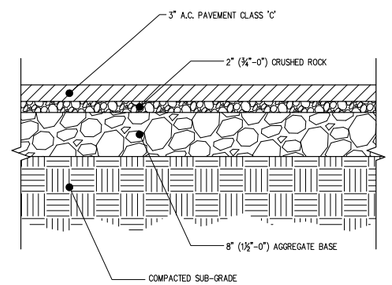

2 STANDARD DUTY AC PAVEMENT - DETAIL
NTS

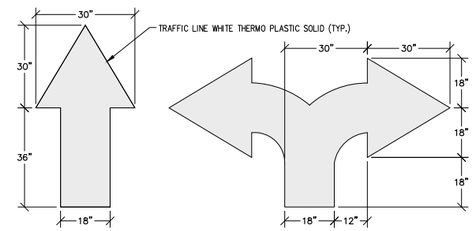

SEE SITE PLAN FOR LOCATION AND DIRECTION

3 DIRECTIONAL ARROWS - DETAIL
NTS

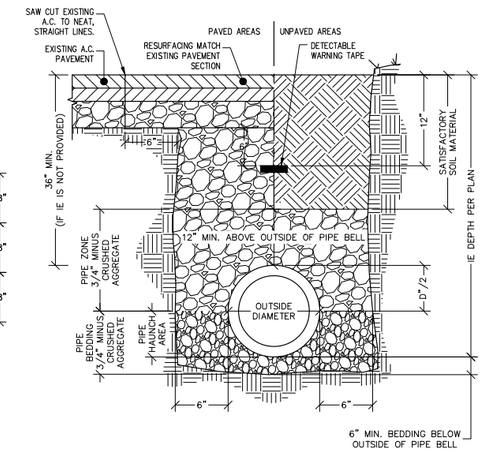

4 TRENCH BACKFILL & PIPE BEDDING - DETAIL
NTS

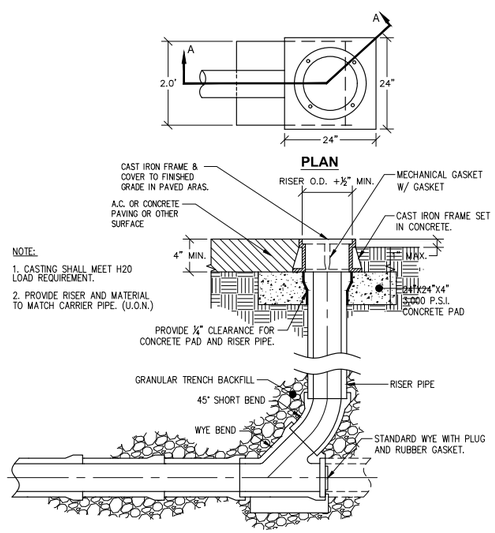

SECTION A-A

5 PRIVATE CLEANOUT - DETAIL
NTS

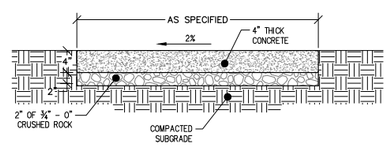

NOTES:

1. CONCRETE SHALL BE 3500 P.S.I.
2. STANDARD SIDEWALK CROSS SLOPE SHALL BE 2% . WHEN THE LOT IS BELOW THE TOP OF THE CURB AND SLOPES DOWN FROM THE CURB, A MINUS 2% SLOPE MAY BE REQUIRED.
3. CONCRETE DEPTH FOR STANDARD SIDEWALKS SHALL BE NOMINAL 4" MIN. DRIVEWAY SECTIONS INCLUDING SIDEWALKS THROUGH DRIVEWAYS SHALL BE NOMINAL 6" MIN.
4. EXPANSION JOINTS WITH PREMOLDED FILLER SHALL BE INSTALLED BETWEEN DRIVEWAYS AND SIDEWALK AT THE DIRECTION OF THE ENGINEER. CONTRACTION JOINTS SHALL BE INSTALLED AT APPROXIMATE INTERVALS OF 15 FEET BY CUTTING AT LEAST 1/3 OF THE DEPTH OF THE CONCRETE. "DUMMY" JOINTS SHALL BE INSTALLED AT APPROXIMATE INTERVALS OF 5 FEET.
5. INSTALL A BOND BREAKER OR ISOLATION JOINT BETWEEN BACK OF CURB AND SIDEWALK, AND AROUND ANY OBSTRUCTION WITHIN SIDEWALK AREA.
6. SEE STANDARD WHEEL CHAIR/BICYCLE RAMP DETAILS FOR SIDEWALK PATTERNS AT INTERSECTION CURB RETURNS.

6 PRIVATE SIDEWALK - DETAIL
NTS

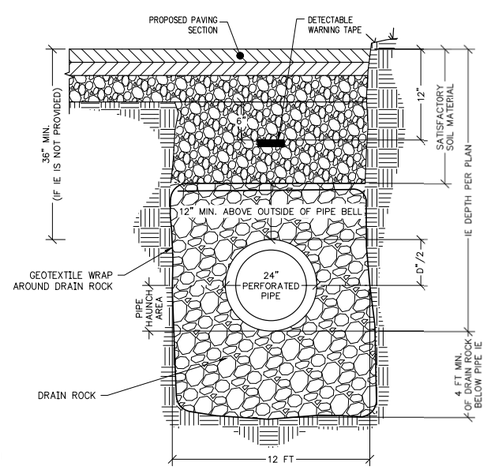

SOAKER TRENCH DETAILS (PER CITY OF GRESHAM DESIGN STANDARDS):
1) DRAIN ROCK SHALL MEET REQUIREMENTS SET BY C.O.G. 402.02.10
2) GEOTEXTILE SHALL MEET REQUIREMENTS SET BY C.O.G. 205.02.11 AND TABLE 205.02.11C

7 SOAKAGE TRENCH CROSS SECTION - DETAIL
NTS

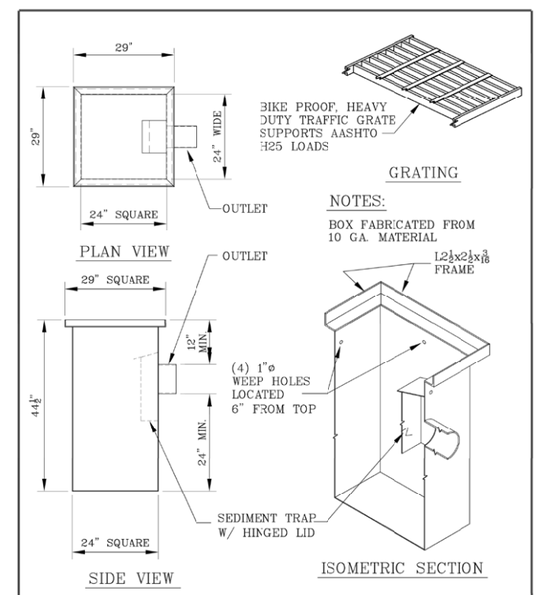

STATE APPROVED – ASPHALT DIPPED

GSB Gibson Steel Basins SINCE 1972
247 Washington St. Eugene, Or. 97401 ph:(541) 687 – 8672 fax:344-0207

24" SQUARE – 4"ø OR 6"ø OR 8"ø OUTLET
STORM WATER CATCH BASIN
PROJ. MAN. DOUG P. | DWN. PAUL G. | SCALE NONE
DATE: JAN. 23, 00 | MODEL: MPCD10-42H0-4&6&0-4WH
DWG # T2

ROCKWOOD RISING SOUTH
TAX LOT 07904
TAX MAP 1N 3E 32CC
SW1/4 SW1/4 SEC.32 T.1N.R.3E.W.M.
GRESHAM, OREGON

PRIVATE CONSTRUCTION DETAILS

CITY OF GRESHAM PROJECT # 072654

REVISIONS

NO.	DATE	DESCRIPTION
0	03/16/20	1ST DR SET SUBMITTAL
1		
2		
3		
4		

EMERIO Design
6445 SW FALLBROOK PLACE, SUITE 100
BEAVERTON, OREGON 97008
(503) 626-6822
FAX: (503) 639-9592
www.emeriodesign.com

REGISTERED PROFESSIONAL ENGINEER
ERIC DANIEL EVANS

SHEET 011 OF 018

FILE:P:\203-005 Rockwood N\dwg\civ\Building C\203-005_011det1, Layout: 011 PRIVATE CONSTRUCTION DETAILS, Plot Date: 3/16/2020 3:11 PM, by: Tyler Korb

CIVIL PRIVATE CONSTRUCTION DETAILS

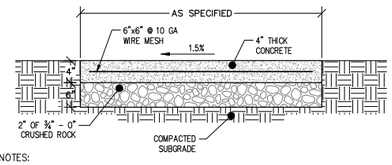

NOTES:

1. CONCRETE SHALL BE 4000 P.S.I. MIN
   –AIR ENTRAPMENT OF 6% +/– 1.5%
   –3" SLUMP MAX
   –WATER CEMENT RATIO OF 0.45 MAX
   –6"X6" 10 GAGE WIRE MESH FOR CRACK CONTROL
2. EXPANSION JOINT WITH PREMOLDED FILLER SHALL BE INSTALLED BETWEEN DRIVEWAYS AND SIDEWALK AT THE DIRECTION OF THE ENGINEER. CONTRACTION JOINTS SHALL BE INSTALLED AT APPROXIMATE INTERVALS OF 15 FEET BY CUTTING AT LEASE 1/3 OF THE DEPTH OF THE CONCRETE. "DUMMY" JOINTS SHALL BE INSTALLED AT APPROXIMATE INTERVALS OF 5 FEET.
3. INSTALL A BOND BREAKER OR ISOLATION JOINT BETWEEN BACK OF CURB AND SIDEWALK, AND AROUND ANY OBSTRUCTION WITHIN SIDEWALK AREA.
4. SEE STANDARD WHEEL CHAIR/BICYCLE RAMP DETAILS FOR SIDEWALK PATTERNS AT INTERSECTION CURB RETURNS.

8 **PRIVATE SIDEWALK (VEHICLE LOAD)- DETAIL**
NTS

NDS WE PUT WATER IN ITS PLACE — **TECHNICAL SPECIFICATIONS**

GRAVITY BACKWATER VALVE

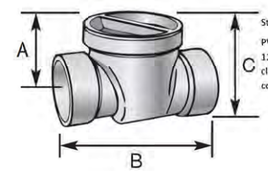

Standard Material

PVC components: Virgin PVC with cell classification 12454 & corresponding physical properties as classified by ASTM D1784. Gaskets/O-ring : Must comply weigh requirements of ASTM C1440.

The NDS gravity flow Backwater Valve is designed to protect low areas or basements from the backflow of waste from the street sewers. It is available in 2", 3", 4", and 6" Hubs outlets; which fit 2", 3", 4" and 6" DVW and IPS pipe. The 3", 4" and 6" Hubs may also be adapted to fit sewer and drain pipe with the use of NDS "DWV to Sewer and Drain Adapters" (2P41, 3P42, 2P43).

	Part No.	Description	Color	Wt. lbs. (kg.)
PVC	275P	2" PVC Backwater Valve	White	1
	275PR	2" PVC Backwater Valve with Riser and Cover	White	5.45
	275P	2" PVC Backwater Valve	White	2.25
	275PR	2" PVC Backwater Valve with Riser and Cover	White	5.45
	375P	3" PVC Backwater Valve	White	4.33
	375PR	3" PVC Backwater Valve with Riser	White	8.95
	375R	3" PVC Backwater Valve with Riser and Cover	White	8.95
ABS	275	2" ABS Backwater Valve	Black	1
	275	2" ABS Backwater Valve	Black	1.45
	275R	2" ABS Backwater Valve with Riser and Cover	Black	4.65
	475	4" ABS Backwater Valve	Black	3.50
	475R	4" ABS Backwater Valve with Riser and Cover	Black	7.60
	675	6" ABS Backwater Valve and Cover	Black	7.45

Item Number	A	B	C	Riser Height	Riser Dia.
275P, 275	2.18	5.33	3.53	16	4
275PR	2.18	5.33	3.53	16	4
375P, 375	3.51	7.56	6.10	16	6
375PR, 375R	3.51	7.56	6.10	16	6
475P, 475	4.47	11.18	7.18	16	8
475PR, 475R	4.47	11.18	7.18	16	8
675P, 675	5.50	15.25	9.90	16	10

851 N. Harvard Avenue
Lindsay, CA 93247
800-726-1994

Visit **ndspro.com** for specs, detail drawings, and case studies

NDS WE PUT WATER IN ITS PLACE

1118

OLDCASTLE POLYMER
(formerly H-Series)

COVER

Style: Flush Solid
Material: Polymer Concrete
Model: 11" x 18"
Weight: Tier 15: 20 lbs.
Tier 22: 28 lbs.
Stc. Fasteners: 1/2-13 Stainless Steel Hex Head Bolt, Washer and Floating Nut
Options: Logos and Special Markings
Surface: Slip Resistant
Performance: ANSI/SCTE-77, Tier 15 or Tier 22*

Cover comes standard with permanent markings for manufacturer, load rating, model size and manufacturing location.

BODY

Material: Polymer Concrete
Model: 11" x 18"
Weight: 12" Depth: 39 lbs.
18" Depth: 54 lbs.
Wall Type: Straight
Performance: ANSI/SCTE-77 Tier 22

LOAD RATING / NOTES

MEDIUM DUTY ANSI/SCTE TIER 15

HEAVY DUTY ANSI/SCTE TIER 22

For use in non-vehicular traffic situations only. Weights and dimensions may vary slightly. Actual load rating is determined by the box and cover combination.

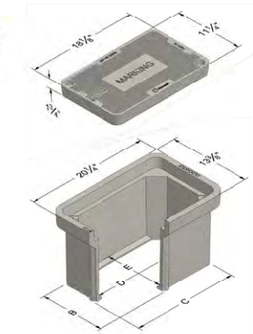

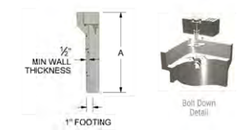

	A	B	C	D	E
1118-12	12	11-3/16	18-1/16	16-7/16	9-9/16
1118-18	18	11-1/16	17-15/16	16-3/16	9-8/16

† Fitted upon lid and body combination, this unit can be Tier 15 or Tier 22. T22 rating when paired with T22 polymer concrete lid.

Oldcastle Infrastructure A CRH COMPANY — oldcastleenclosures.com (800) 735-5566

1118

OLDCASTLE POLYMER
(formerly H-Series)

COVER OPTIONS

Oldcastle Polymer, Flush Solid
Steel, Solid

FASTENER OPTIONS

Hex Head Bolt (A)
Penta Head Bolt (B)
Penta Head Coil Thread Bolt (B)
Oldcastle Vandal Resistant Bolt (C)
Captive Bolt Retainer

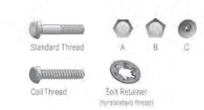

ADD ON OPTIONS

EMS Marker
Mousehole/Knockouts
Rack Mount
Cable Racks/Cable Arms
Unistrut
Pulling Eye - 1,000 lb and 3,000 lb
Ground Buss
Dividers
Racking Provision
Lid Gaskets*
Solid Bottom
Custom Marking Plate (Polymer)

* Lid Gaskets inhibit water flow into the box, they do not make enclosure fully watertight

WARNING: Cancer - www.P65Warnings.ca.gov

All informational information within sheet is correct at the time of publication. Oldcastle reserves the right to incorporate or update product information without notice.

Revision 11/26/18
© 2018 Oldcastle Infrastructure, Inc.

Oldcastle Infrastructure A CRH COMPANY — oldcastleenclosures.com (800) 735-5566

ROCKWOOD RISING SOUTH
TAX LOT 07904
TAX MAP 1N 3E 32CC
SW1/4 SW1/4 SEC.32 T.1N.R.3E.W.M.
GRESHAM, OREGON

PRIVATE CONSTRUCTION DETAILS

CITY OF GRESHAM PROJECT # 072654

REVISIONS

NO.	DATE	DESCRIPTION
0	03/16/20	1ST DR SET SUBMITTAL
1		
2		
3		
4		

EMERIO Design
6445 SW FALLBROOK PLACE, SUITE 100
BEAVERTON, OREGON 97008
PHONE: (503) 641-8823
FAX: (503) 639-9592
www.emeriodesign.com

REGISTERED PROFESSIONAL ENGINEER 34865 ERIC DANIEL EVANS
Expires: 12/31/2020

SHEET 11A OF 018

FILE:P:\203-005 Rockwood N\dwg\civil\Building C\203-005_011.1det2, Layout: 11A PRIVATE CONSTRUCTION DETAILS, Plot Date: 3/16/2020 3:11 PM, by: Tyler Korb

TRENCH AND BACKFILL

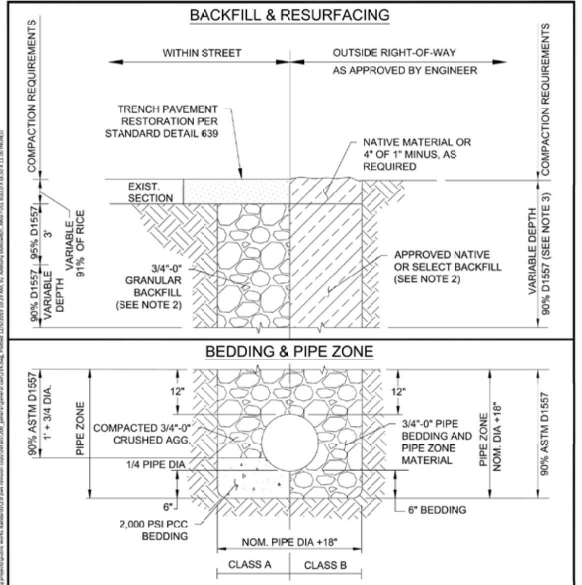

NOTES:
1. WHERE REQUIRED BY THE ENGINEER OF RECORD OR THE CITY, GRANULAR TRENCH STABILIZATION SHALL BE PLACED PRIOR TO THE PIPE ZONE MATERIAL. SIZE AND DEPTH TO BE BASED ON SOIL CONDITIONS
2. USE CLSM WHERE SPECIFIED AND WHERE REQUIRED BY THE ENGINEER.
3. IN AREAS WHERE NATIVE BACKFILL IS BROUGHT TO THE SURFACE AND IS TO BE SEEDED, DO NOT COMPACT THE TOP 2".

CITY OF GRESHAM — TRENCH AND BACKFILL — DRAWN KRB — REV. DATE JAN 2019 — APPR. — DETAIL NO. 214 — PWS VERSION: JAN 2020

STANDARD SIGNPOST

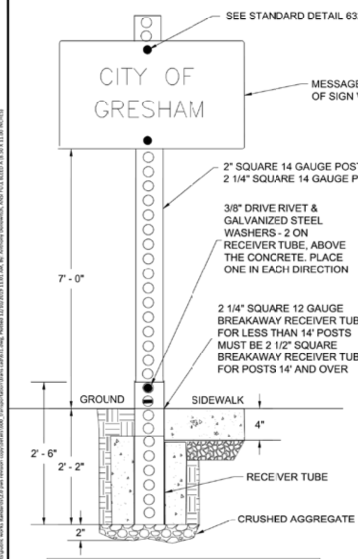

RECEIVER TUBES			
POST SIZE	GAUGE	ANCHOR SIZE	CONCRETE SET DEPTH
≤10'	12 GA	2 1/4" X 24"	22"
12'	12 GA	2 1/4" X 30"	28"
14'	12 GA	2 1/2" X 36"	34"
16'-18'	7 GA	2 1/2" X 36	34"

NOTES:
1. RECEIVER TUBE SHALL BE COVERED BY DUCT TAPE ON ALL SIDES.
2. RECEIVER TUBE SHALL BE SET IN 22" OF CONCRETE UNLESS IN SIDEWALK.
3. RECEIVER TUBES SET IN SIDEWALK SHALL HAVE 2 HOLES COMPLETELY ABOVE FINISHED SURFACE.
4. IF RECEIVER TUBE IS SET IN SIDEWALK IT SHALL BE 2'-2" DEEP & BACKFILLED WITH COMPACTED FILL, THEN CONCRETE FROM BOTTOM TO TOP OF WALK.
5. SIGN PLACEMENT IN SIDEWALK SHALL ALLOW FOR 5' CLEAR PASSAGE & EDGE OF SIGN SHALL BE 24" FROM FACE OF CURB.
6. POST SHALL BE COATED WITH ANTI-SEIZE ON THE SECTION FITTED INSIDE THE RECEIVER TUBE.

NTS

CITY OF GRESHAM — STANDARD SIGNPOST — DRAWN CM — REV. DATE JAN 2019 — APPR. — DETAIL NO. 631 — PWS VERSION: JAN 2020

TYPICAL HYDRANT MARKER LOCATION

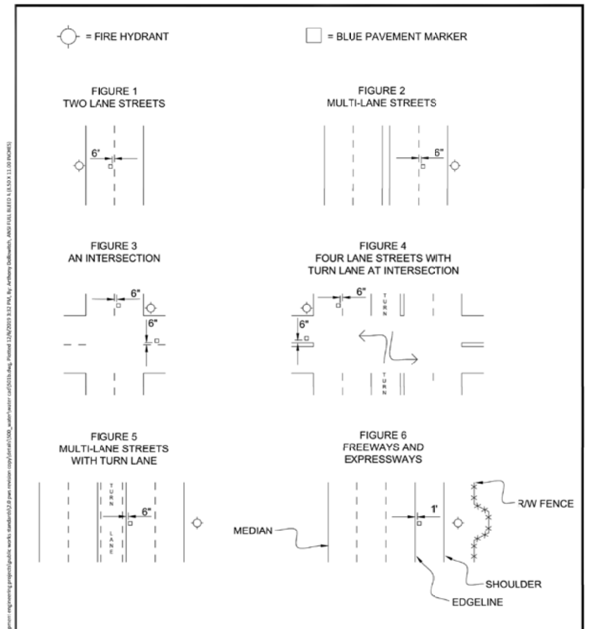

NOTES:
1. PAVEMENT MARKER TO BE 3M 209-B TWO WAY BLUE RAISED PAVEMENT MARKER OR APPROVED EQUAL

CITY OF GRESHAM — TYPICAL HYDRANT MARKER LOCATION — DRAWN JIA — REV. DATE JAN 2019 — APPR. — DETAIL NO. 501B — PWS VERSION: JAN 2020

MONOLITHIC CURB AND GUTTER

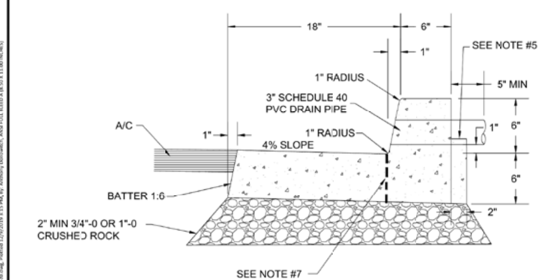

NOTES:
1. PCC SHALL BE 3300 PSI STRENGTH AT 28 DAYS EXCEPT IN COMMERCIAL AREAS WHERE PCC SHALL BE 5000 PSI STRENGTH AT 28 DAYS.
2. CONTRACTION JOINTS SHALL BE PLACED AT 15' MAX. SPACING.
3. CURB EXPOSURE SHALL BE 8" AT ALL STORMWATER INLETS.
4. DRAIN PIPE SHALL BE PLACED 2 PER LOT 6" INSIDE EACH PROPERTY LINE. DRAIN PIPE SHALL BE EXTENDED TO 1' BEHIND BACK OF SIDEWALK WHEN SIDEWALK IS INSTALLED BEFORE THE LOT IS CONNECTED TO THE DRAIN PIPE.
5. ADD 2" WIDE SHELF, 4" BELOW TOP OF CURB WHEN CURB IS PLACED ADJACENT TO SIDEWALK.
6. CRUSHED BASE ROCK SHALL BE COMPACTED TO 95% RELATIVE DENSITY PER ASTM D1557.
7. WHEN A DRIVEWAY IS PLACED WHERE THERE IS AN EXISTING MONOLITHIC CURB MAKE A VERTICAL SAWCUT AT THE FACE OF CURB. REPLACE BACK PART OF CURB AND ADD DRIVEWAY WITH ONE CONTIGUOUS POUR.

NTS

CITY OF GRESHAM — MONOLITHIC CURB AND GUTTER — DRAWN CM — REV. DATE JAN 2019 — APPR. — DETAIL NO. 620 — PWS VERSION: JAN 2020

DRIVEWAY APPROACH

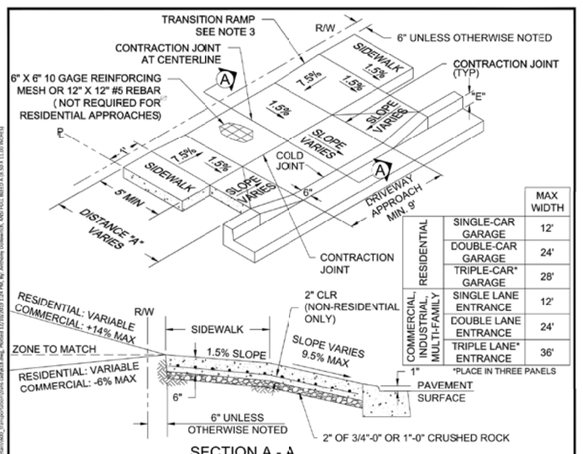

		MAX WIDTH
RESIDENTIAL	SINGLE-CAR GARAGE	12'
	DOUBLE-CAR GARAGE	24'
	TRIPLE-CAR* GARAGE	28'
COMMERCIAL, INDUSTRIAL, MULTI-FAMILY	SINGLE LANE ENTRANCE	12'
	DOUBLE LANE ENTRANCE	24'
	TRIPLE LANE* ENTRANCE	36'

*PLACE IN THREE PANELS

NOTES:
1. DISTANCE "A" VARIES WITH STREET CLASSIFICATION. SEE STREET CROSS SECTION DETAILS.
2. SEE STANDARD DETAILS 620 AND 621 FOR CURB EXPOSURE DIMENSION "E".
3. SLOPES SHOWN ARE RELATIVE TO HORIZONTAL. TRANSITION RAMP SHALL BE 7.5% MAX SLOPE OR 15' MAX IN LENGTH. SIDE FLARES IN PLANTER STRIP MAY BE ANY SLOPE.
4. ALL SURFACES SHALL BE LIGHTLY BROOMED AND EDGED IN A WORKMANLIKE MANNER.
5. SAW CUT EXISTING CURBS WHERE THEY ARE TO BE REMOVED - IF LESS THAN 3' TO EXISTING JOINT, REMOVE TO JOINT. EXISTING ASPHALT IN FRONT OF THE APPROACH SHALL BE SAW CUT MINIMUM 18" FROM CURB FACE AND REPLACED WITH COMPACTED HOT MIX.
6. PCC FOR RESIDENTIAL APPROACHES SHALL BE 3,300 PSI AT 28 DAYS AND FOR COMMERCIAL, INDUSTRIAL, AND MULTI-FAMILY APPROACHES SHALL BE 5,000 PSI AT 28 DAYS AND REINFORCED.
7. FOR SITES WITH HIGH VOLUME TRIP GENERATION, SEE DETAIL 619.
8. IN LDR DISTRICTS, THE MAXIMUM DRIVEWAY WIDTH IS 16 FEET FOR INTERIOR LOTS WITH LESS THAN 45 FEET OF STREET FRONTAGE AND 12 FEET FOR CORNER LOTS WITH LESS THAN 36 FEET OF STREET FRONTAGE AS MEASURED FROM THE CURB RETURN TO PROPERTY LINE.

NTS

CITY OF GRESHAM — DRIVEWAY APPROACH — DRAWN KRB — REV. DATE JAN 2020 — APPR. — DETAIL NO. 618 — PWS VERSION: JAN 2020

CURB RETURN DRIVEWAY APPROACH

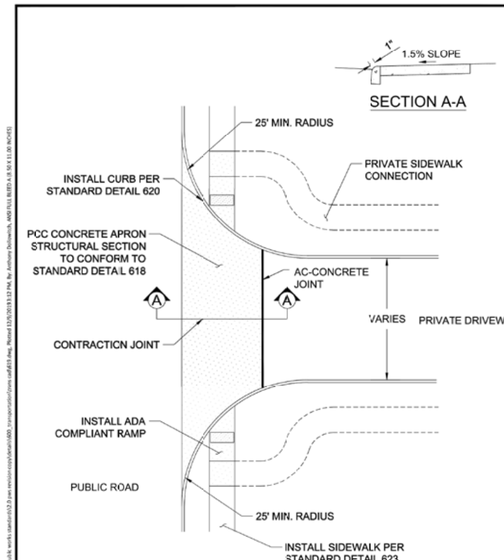

NOTES:
1. THIS TYPE OF APPROACH TO BE USED FOR HIGH VOLUME (500 ADT OR HIGHER) TRAFFIC GENERATORS WITH APPROVAL OF ENGINEER.

NTS

CITY OF GRESHAM — CURB RETURN DRIVEWAY APPROACH — DRAWN KRB — REV. DATE JAN 2019 — APPR. — DETAIL NO. 619 — PWS VERSION: JAN 2020

TYPICAL SIDEWALK

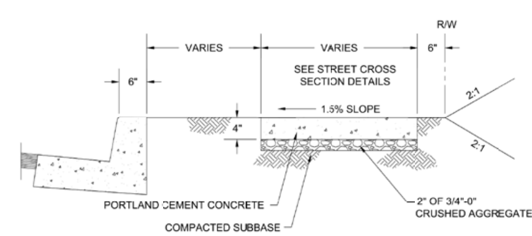

NOTES:
1. LOCATION AND WIDTH OF SIDEWALK WILL VARY DEPENDING UPON FUNCTIONAL CLASSIFICATION OF THE STREET. SEE TYPICAL STREET SECTION DETAILS.
2. PCC SHALL BE 3300 PSI STRENGTH AT 28 DAYS.
3. CONTRACTION JOINTS SHALL BE PLACED AT ALL CHANGES OF DIRECTION, POINTS OF CURVATURE, ALIGNED WITH CURB CONTRACTION AND EXPANSION JOINTS WHEN SIDEWALK IS ADJACENT TO CURB, AND AT 15' (MAX) INTERVALS. JOINTS SHALL BE 1/8" TO 1/4" WIDE AND A MINIMUM DEPTH OF 1/3 THE THICKNESS OF THE CONCRETE.
4. ALL SURFACES SHALL BE LIGHTLY BROOMED AND EDGED IN A WORKMANLIKE MANNER.
5. USE THIS DETAIL FOR MULTI USE PATH SECTIONS ADJACENT TO ROADWAYS.

CITY OF GRESHAM — TYPICAL SIDEWALK — DRAWN CM — REV. DATE JAN 2020 — APPR. — DETAIL NO. 623 — PWS VERSION: JAN 2020

SIDEWALK RAMP

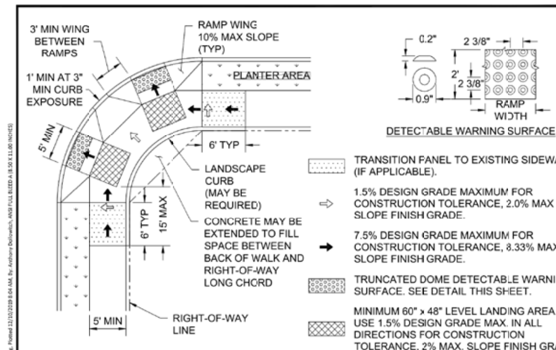

NOTES:
1. SIDEWALK RAMP DETAILS ARE BASED ON US DOT REQUIREMENTS. RAMPS MUST BE ADA COMPLIANT.
2. SIDEWALK CURB RAMP SLOPES SHOWN ARE RELATIVE TO THE TRUE LEVEL HORIZON (ZERO BUBBLE). SIDE FLARE SLOPES SHALL BE 10% MAXIMUM.
3. TWO SIDEWALK RAMPS PER CORNER ARE REQUIRED AT ALL NEW INTERSECTIONS. RAMPS SHALL BE LOCATED WITHIN THE CROSSWALK AND AS NEAR THE CONTINUOUS PEDESTRIAN ACCESS ROUTE AS PRACTICAL.
4. PLACE TRUNCATED DOME DETECTABLE WARNING TEXTURE IN THE LOWER 2 FEET OF THROAT OF RAMP ONLY. ARRANGE DOMES USING IN-LINE-PATTERN ONLY. COLOR OF TEXTURE TO BE BRICK RED.
5. SIDEWALK RAMPS SHALL BE FORMED AND POURED SEPARATE FROM SIDEWALK AND LANDINGS. COLD JOINTS SHALL BE KEYED OR DOWELED. EDGES OF THE ACCESSIBLE ROUTE SHALL BE POURED AGAINST RIGID FORMS OR CURED CONCRETE TO ENSURE COMPLIANCE WITH ORS 447.310 AND AMERICANS WITH DISABILITIES ACT.
6. PLACE AND COMPACT MIN. 2" OF 3/4"-0 CRUSHED ROCK BENEATH ALL CONCRETE SURFACES.
7. PROVIDE MINIMUM 1 FOOT CLEAR OF VERTICAL OBSTRUCTIONS INCLUDING CURBS ADJACENT TO 60" x 48" LEVEL LANDINGS.
8. INSTALL LANDSCAPE CURB AND/OR PLANTER AREA CURBS AS NEEDED.
9. THE RUNNING SLOPE OF A TRANSITION PANEL SHALL BE 7.5% MAXIMUM, BUT IS NOT REQUIRED TO EXCEED 15' IN LENGTH MEASURED FROM THE LEVEL LANDING AREA. LENGTH SHALL BE MEASURED ALONG THE BACK OF THE SIDEWALK.

NTS

CITY OF GRESHAM — SIDEWALK RAMP — DRAWN KRB — REV. DATE JAN 2020 — APPR. — DETAIL NO. 624 — PWS VERSION: JAN 2020

ROCKWOOD RISING SOUTH
TAX LOT 07904
TAX MAP 1N 3E 32CC
SW1/4 SW1/4 SEC.32 T.1N.R.3E.W.M.
GRESHAM, OREGON

CONSTRUCTION DETAILS

CITY OF GRESHAM PROJECT # 072654

REVISIONS

NO.	DATE	DESCRIPTION
0	03/16/20	1ST DR SET SUBMITTAL
1		
2		
3		
4		

EMERIO Design
6445 SW FALLBROOK PLACE, SUITE 100
BEAVERTON, OREGON 97008
TEL: (503) 746-8812
FAX: (503) 639-9592
www.emeriodesign.com

REGISTERED PROFESSIONAL ENGINEER 54665 OREGON ERIC DANIEL EVANS — DocuSigned by: Eric Evans

SHEET 012 OF 018

FILE: P:\203-005 Rockwood N\dwg\civl\Building C\203-005_012det2, Layout: 012 CONSTRUCTION DETAILS, Plot Date: 3/16/2020 3:11 PM, by: Tyler Korb

CIVIL CONSTRUCTION DETAILS

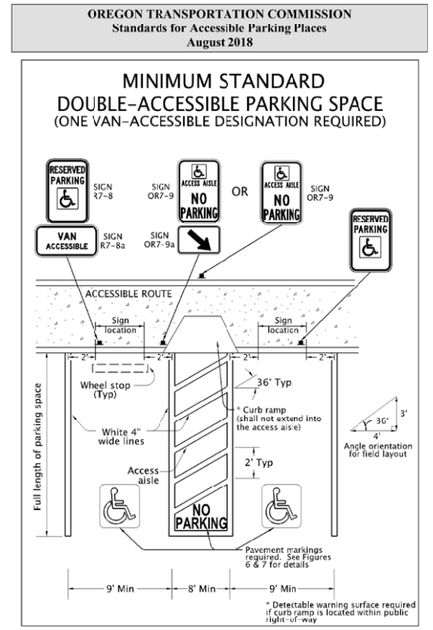

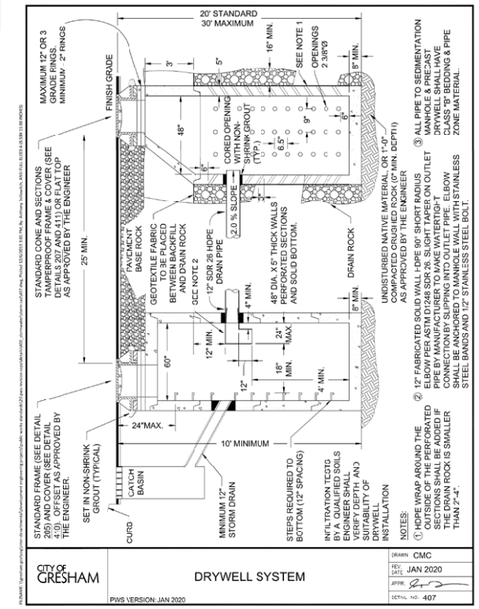

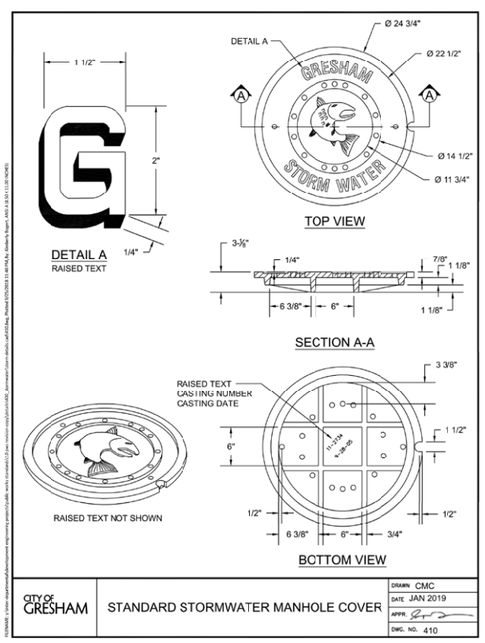

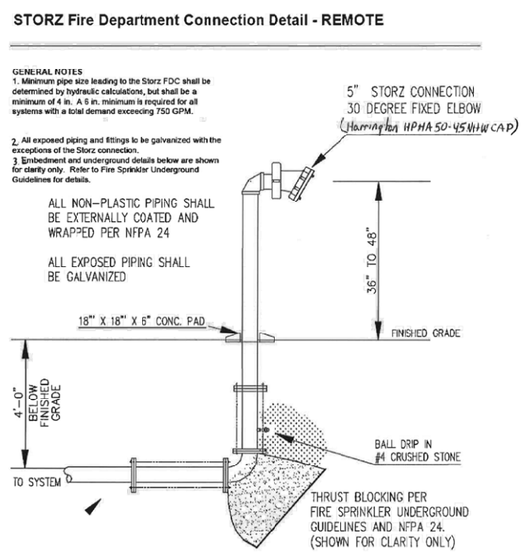

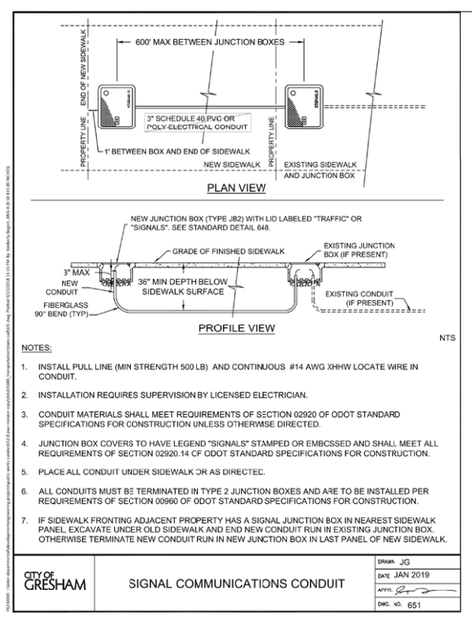

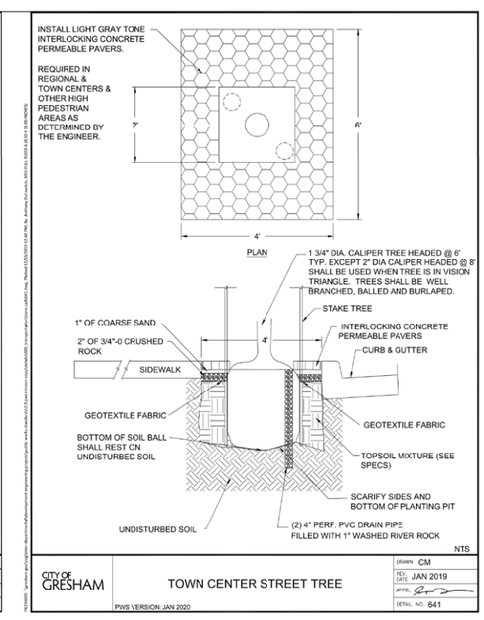

ROCKWOOD RISING SOUTH
TAX LOT 07904
TAX MAP 1N 3E 32CC
SW1/4 SW1/4 SEC.32 T.1N.R.3E.W.M.
GRESHAM, OREGON

CONSTRUCTION DETAILS

CITY OF GRESHAM PROJECT # 072654

REVISIONS

NO.	DATE	DESCRIPTION
0	03/16/20	1ST DR SET SUBMITTAL
1		
2		
3		
4		

EMERIO Design
6445 SW FALLBROOK PLACE, SUITE 100
BEAVERTON, OREGON 97008
TEL: (503) 639-3092
FAX: (503) 639-9992
www.emeriodesign.com

REGISTERED PROFESSIONAL ENGINEER
54685
Digitally signed by Eric Daniel Evans
OREGON
JULY 31, 2019
ERIC DANIEL EVANS
EXPIRES: 12/31/20

SHEET 013 OF 018

FILE:P:\203-005 Rockwood N\dwg\civ\Building C\203-005_013det3, Layout: 013 CONSTRUCTION DETAILS, Plot Date: 3/16/2020 3:11 PM, by: Tyler Korb

CIVIL CONSTRUCTION DETAILS

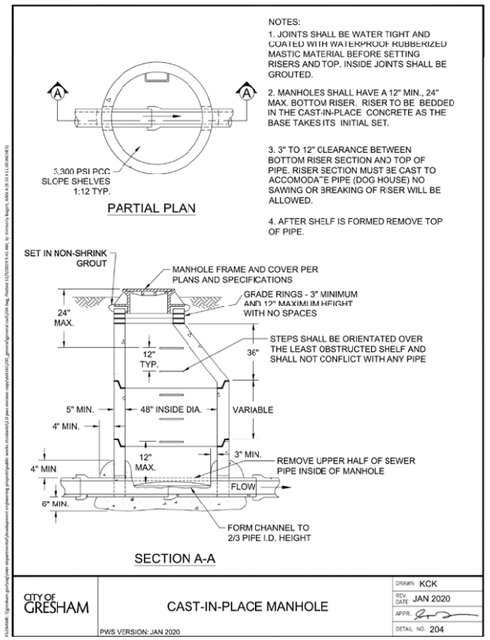

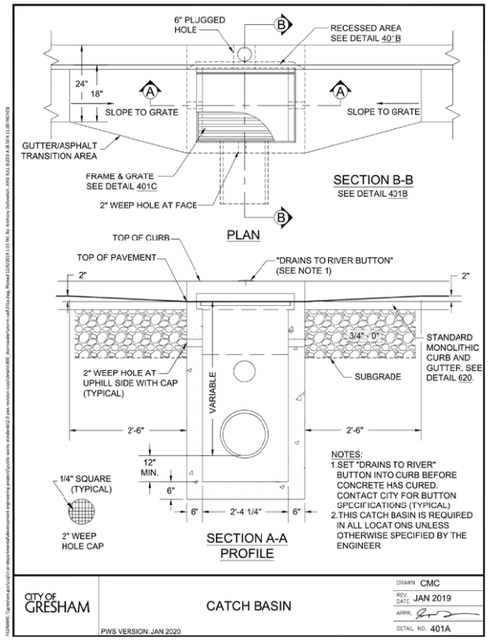

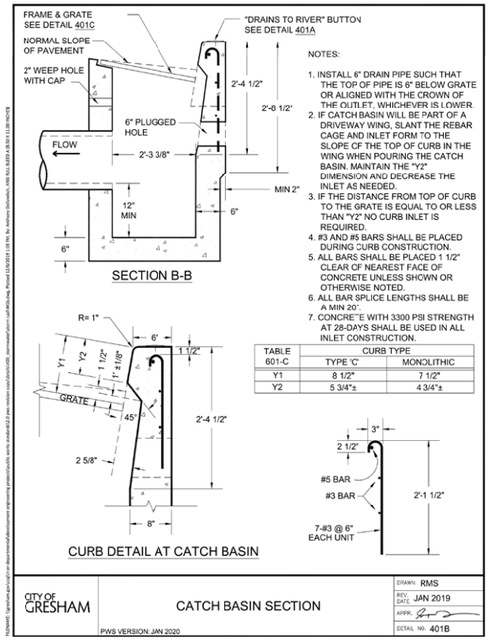

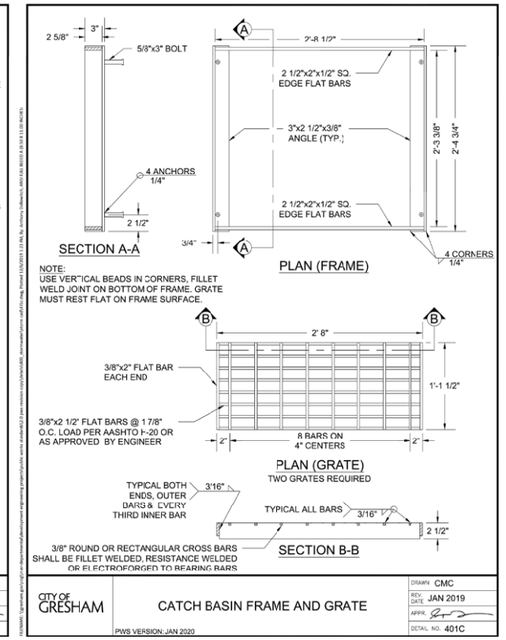

PRIVATE GREASE TRAP

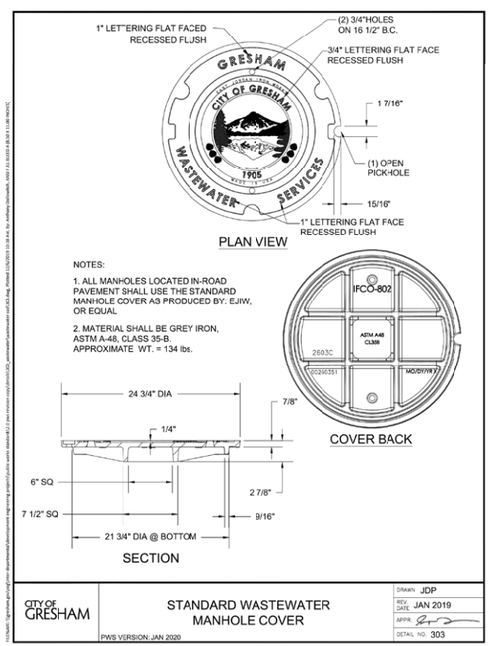

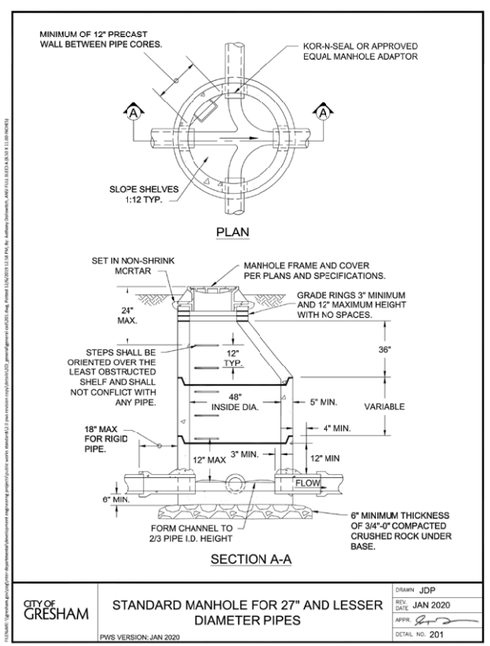

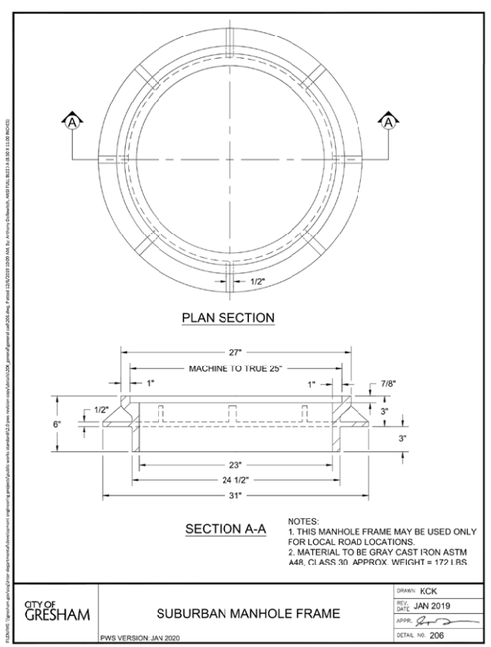

FILE:P:\203-005 Rockwood N\dwg\civ\Building C\203-005_014de14, Layout: 014 CONSTRUCTION DETAILS, Plot Date: 3/16/2020 3:11 PM, by: Tyler Korb

ROCKWOOD RISING SOUTH
TAX LOT 07904
TAX MAP 1N 3E 32CC
SW1/4 SW1/4 SEC.32 T.1N.R.3E.W.M.
GRESHAM, OREGON

CONSTRUCTION DETAILS

CITY OF GRESHAM PROJECT # 072654

REVISIONS

NO.	DATE	DESCRIPTION
0	03/16/20	1ST DR SET SUBMITTAL
1		
2		
3		
4		

EMERIO Design
6445 SW FALLBROOK PLACE, SUITE 100
BEAVERTON, OREGON 97008
TEL: (503) 626-8672
FAX: (503) 639-9592
www.emeriodesign.com

REGISTERED PROFESSIONAL ENGINEER
OREGON
Consultant by: Eric Evans
ERIC DANIEL EVANS
EXPIRES: 12/31/20

SHEET 014 OF 018

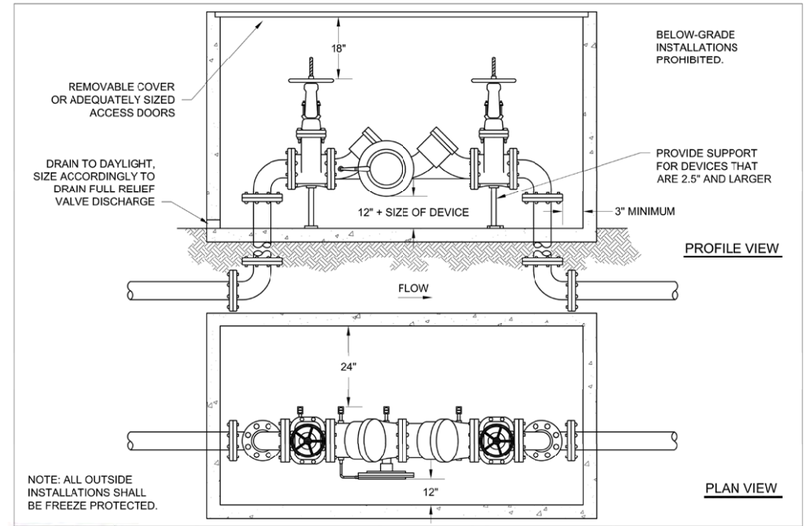

Rockwood Water People's Utility District

STANDARD REDUCED PRESSURE BACKFLOW DEVICE

ROCKWOOD WATER PEOPLE'S UTILITY DISTRICT
19601 NE HALSEY ST., PORTLAND, OR 97230-7489, OFFICE: (503) 665-4179, FAX: (503) 667-5108

DRAWN BY: J. HUDSON
DATE: JANUARY 2, 2015
SCALE: N.T.S. DWG NO: SD-38

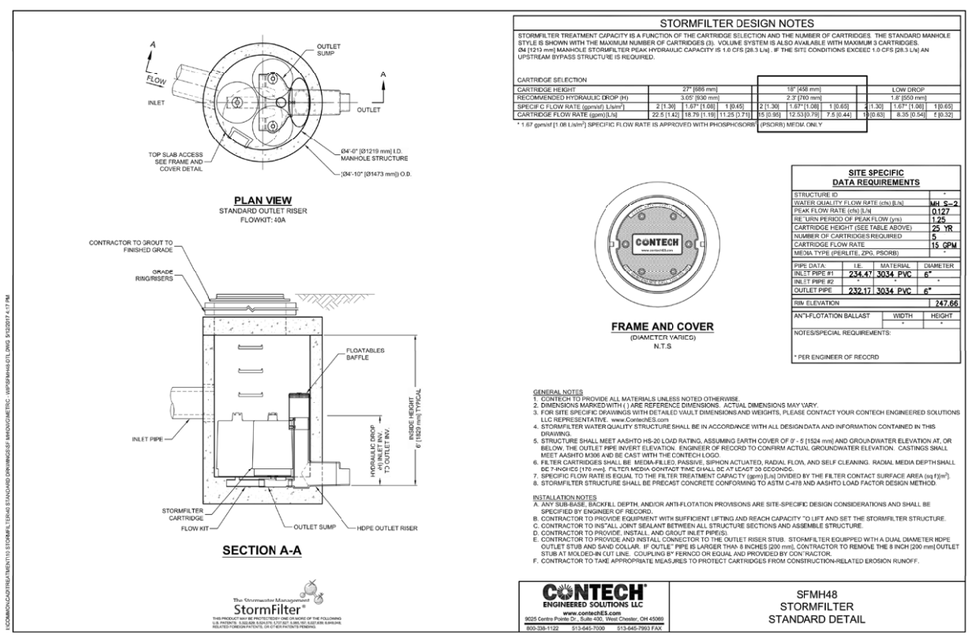

STORMFILTER DESIGN NOTES

STORMFILTER TREATMENT CAPACITY IS A FUNCTION OF THE CARTRIDGE SELECTION AND THE NUMBER OF CARTRIDGES. THE STANDARD MANHOLE STYLE B SHOWN WITH THE MAXIMUM NUMBER OF CARTRIDGES (3). VOLUME SYSTEM IS ALSO AVAILABLE WITH MAXIMUM 3 CARTRIDGES. Ø4 [1219 mm] MANHOLE STORMFILTER PEAK HYDRAULIC CAPACITY IS 1.0 CFS [28.3 L/s]. IF THE SITE CONDITIONS EXCEED 1.0 CFS [28.3 L/s] AN UPSTREAM BYPASS STRUCTURE IS REQUIRED.

CARTRIDGE SELECTION

CARTRIDGE HEIGHT	27" [686 mm]			18" [458 mm]			LOW DROP		
RECOMMENDED HYDRAULIC DROP (H)	3.05' [930 mm]			2.2' [760 mm]			1.8' [550 mm]		
SPECIF C FLOW RATE (gpm/sf) L/s/m²	2 [1.36]	1.67* [1.68]	1 [0.45]	2 [1.36]	1.67* [1.08]	1 [0.45]	2 [1.36]	1.67* [1.08]	1 [0.45]
CARTRIDGE FLOW RATE (gpm) [L/s]	22.5 [1.42]	18.75 [1.18]	11.25 [0.71]	15 [0.95]	12.5 [0.79]	7.5 [0.44]	10 [0.63]	8.35 [0.54]	5 [0.32]

* 1.67 gpm/sf [1.08 L/s/m²] SPECIFIC FLOW RATE IS APPROVED WITH PHOSPHOSORB™ (PSORB) MEDIA ONLY

SITE SPECIFIC DATA REQUIREMENTS

STRUCTURE ID	*
WATER QUALITY FLOW RATE (cfs) [L/s]	MH S-2
PEAK FLOW RATE (cfs) [L/s]	0.127
RETURN PERIOD OF PEAK FLOW (yrs)	1.25
CARTRIDGE HEIGHT (SEE TABLE ABOVE)	25 YR
NUMBER OF CARTRIDGES REQUIRED	5
CARTRIDGE FLOW RATE	15 GPM
MEDIA TYPE (PERLITE, ZPG, PSORB)	*

PIPE DATA:	I.E.	MATERIAL	DIAMETER
INLET PIPE #1	234.47	3034 PVC	6"
INLET PIPE #2	*	*	*
OUTLET PIPE	232.17	3034 PVC	6"

RIM ELEVATION	247.66

AN^3 FLOTATION BALLAST	WIDTH	HEIGHT
	*	*

NOTES/SPECIAL REQUIREMENTS:

* PER ENGINEER OF RECORD

GENERAL NOTES
1. CONTECH TO PROVIDE ALL MATERIALS UNLESS NOTED OTHERWISE.
2. DIMENSIONS MARKED WITH ( ) ARE REFERENCE DIMENSIONS. ACTUAL DIMENSIONS MAY VARY.
3. FOR SITE SPECIFIC DRAWINGS WITH DETAILED VAULT DIMENSIONS AND WEIGHTS, PLEASE CONTACT YOUR CONTECH ENGINEERED SOLUTIONS LLC REPRESENTATIVE. www.ContechES.com
4. STORMFILTER WATER QUALITY STRUCTURE SHALL BE IN ACCORDANCE WITH ALL DESIGN DATA AND INFORMATION CONTAINED IN THIS DRAWING.
5. STRUCTURE SHALL MEET AASHTO HS-20 LOAD RATING, ASSUMING EARTH COVER OF 0' - 2 [1524 mm] AND GROUNDWATER ELEVATION AT, OR BELOW, THE OUTLET PIPE INVERT ELEVATION. ENGINEER OF RECORD TO CONFIRM ACTUAL GROUNDWATER ELEVATION. CASTINGS SHALL MEET AASHTO M306 AND BE CAST WITH THE CONTECH LOGO.
6. FILTER CARTRIDGES SHALL BE MEDIA-FILLED, PASSIVE, SIPHON ACTUATED, RADIAL FLOW, AND SELF CLEANING. RADIAL MEDIA DEPTH SHALL BE 7-INCH (5 [170 mm]). FILTER MEDIA CONTACT TIME SHALL BE AT LEAST 30 SECONDS.
7. SPECIFIC FLOW RATE IS EQUAL TO THE FILTER TREATMENT CAPACITY (gpm [L/s]) DIVIDED BY THE FILTER CONTACT SURFACE AREA (sq ft [m²]).
8. STORMFILTER STRUCTURE SHALL BE PRECAST CONCRETE CONFORMING TO ASTM C-478 AND AASHTO LOAD FACTOR DESIGN METHOD.

INSTALLATION NOTES
A. ANY SUB-BASE, BACKFILL DEPTH, AND/OR ANTI-FLOTATION PROVISIONS ARE SITE-SPECIFIC DESIGN CONSIDERATIONS AND SHALL BE SPECIFIED BY ENGINEER OF RECORD.
B. CONTRACTOR TO PROVIDE EQUIPMENT WITH SUFFICIENT LIFTING AND REACH CAPACITY TO LIFT AND SET THE STORMFILTER STRUCTURE.
C. CONTRACTOR TO INS^ALL JOINT SEALANT BETWEEN ALL STRUCTURE SECTIONS AND ASSEMBLE STRUCTURE.
D. CONTRACTOR TO PROVIDE, INSTALL, AND GROUT INLET PIPE(S).
E. CONTRACTOR TO PROVIDE AND INSTALL CONNECTOR TO THE OUTLET RISER STUB. STORMFILTER EQUIPPED WITH A DUAL DIAMETER HDPE OUTLET STUB AND SAND COLLAR. IF OUTLET PIPE IS LARGER THAN 8 INCHES [200 mm], CONTRACTOR TO REMOVE THE 8 INCH [200 mm] OUTLET STUB AT MOLDED-IN CUT LINE. COUPLING B^ FERNCO OR EQUAL AND PROVIDED BY CON^RACTOR.
F. CONTRACTOR TO TAKE APPROPRIATE MEASURES TO PROTECT CARTRIDGES FROM CONSTRUCTION-RELATED EROSION RUNOFF.

CONTECH MANHOLE S-2

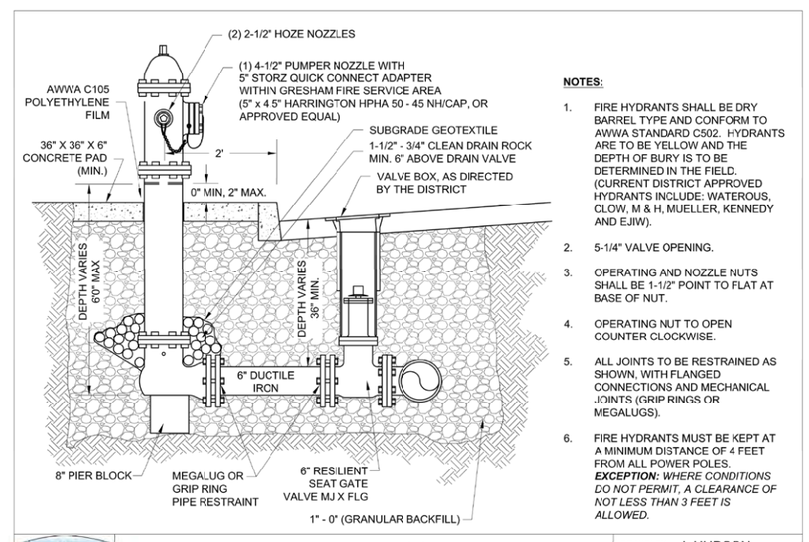

NOTES:

1. FIRE HYDRANTS SHALL BE DRY BARREL TYPE AND CONFORM TO AWWA STANDARD C502. HYDRANTS ARE TO BE YELLOW AND THE DEPTH OF BURY IS TO BE DETERMINED IN THE FIELD. (CURRENT DISTRICT APPROVED HYDRANTS INCLUDE: WATEROUS, CLOW, M & H, MUELLER, KENNEDY AND EJIW).
2. 5-1/4" VALVE OPENING.
3. OPERATING AND NOZZLE NUTS SHALL BE 1-1/2" POINT TO FLAT AT BASE OF NUT.
4. OPERATING NUT TO OPEN COUNTER CLOCKWISE.
5. ALL JOINTS TO BE RESTRAINED AS SHOWN, WITH FLANGED CONNECTIONS AND MECHANICAL JOINTS (GRIP RINGS OR MEGALUGS).
6. FIRE HYDRANTS MUST BE KEPT AT A MINIMUM DISTANCE OF 4 FEET FROM ALL POWER POLES. ***EXCEPTION:*** *WHERE CONDITIONS DO NOT PERMIT, A CLEARANCE OF NOT LESS THAN 3 FEET IS ALLOWED.*

Rockwood Water People's Utility District

FIRE HYDRANT ASSEMBLY

ROCKWOOD WATER PEOPLE'S UTILITY DISTRICT
19601 NE HALSEY ST., PORTLAND, OR 97230-7489, OFFICE: (503) 665-4179, FAX: (503) 667-5108

DRAWN BY: J. HUDSON
DATE: JANUARY 2, 2015
SCALE: N.T.S. DWG NO: SD-5

ROCKWOOD RISING SOUTH
TAX LOT 07904
TAX MAP 1N 3E 32CC
SW1/4 SW1/4 SEC.32 T.1N.R.3E.W.M.
GRESHAM, OREGON

CONSTRUCTION DETAILS

CITY OF GRESHAM PROJECT # 072654

REVISIONS

NO.	DATE	DESCRIPTION
0	03/16/20	1ST DR SET SUBMITTAL
1		
2		
3		
4		

EMERIO Design
6445 SW FALLBROOK PLACE, SUITE 100
BEAVERTON, OREGON 97008
(503) 643-6922
FAX: (503) 639-9592
www.emeriodesign.com

REGISTERED PROFESSIONAL ENGINEER
OREGON
ERIC DANIEL EVANS
Digitally signed by Eric Evans
EXPIRES: 12/31/20

SHEET 016 OF 018

FILE:P:\203-005 Rockwood N\dwg\civ\Building C\203-005_016det5, Layout: 016 CONSTRUCTION DETAILS, Plot Date: 3/16/2020 3:12 PM, by: Tyler Korb

CIVIL PUBLIC WORKS - HALF STREET IMPROVEMENT

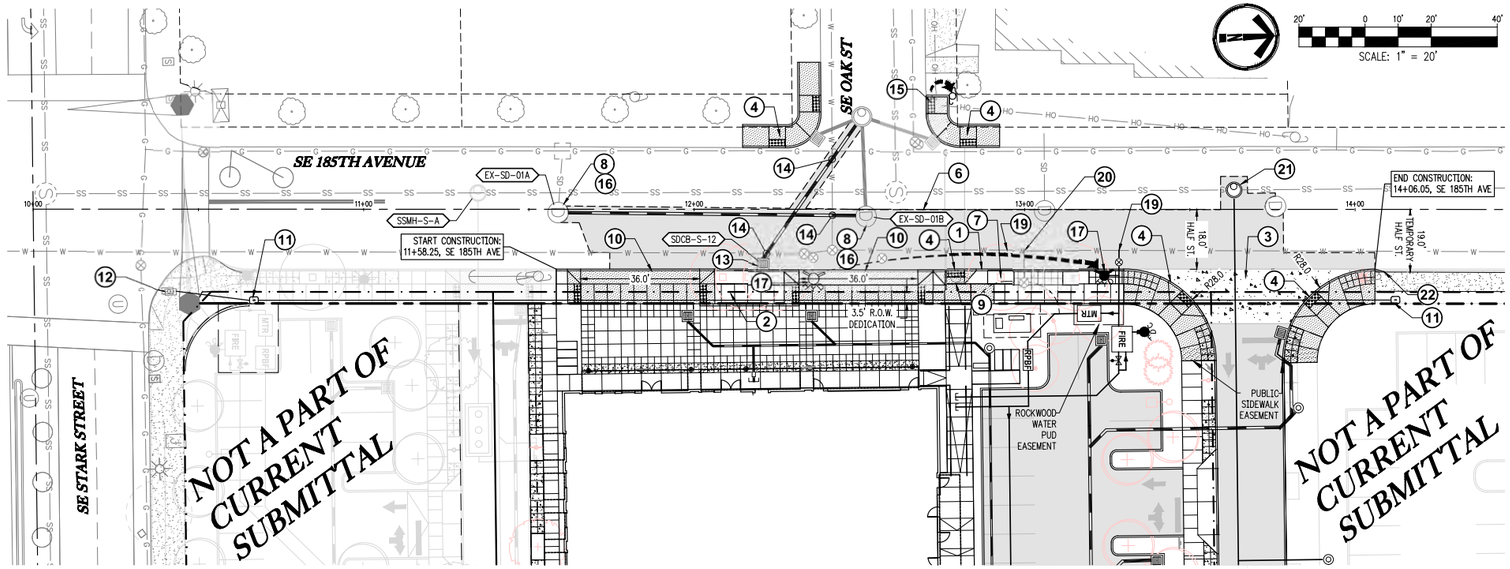

SE 185TH AVE (STA 11+58 TO 14+07) - PLAN

SCALE: 1"=20'

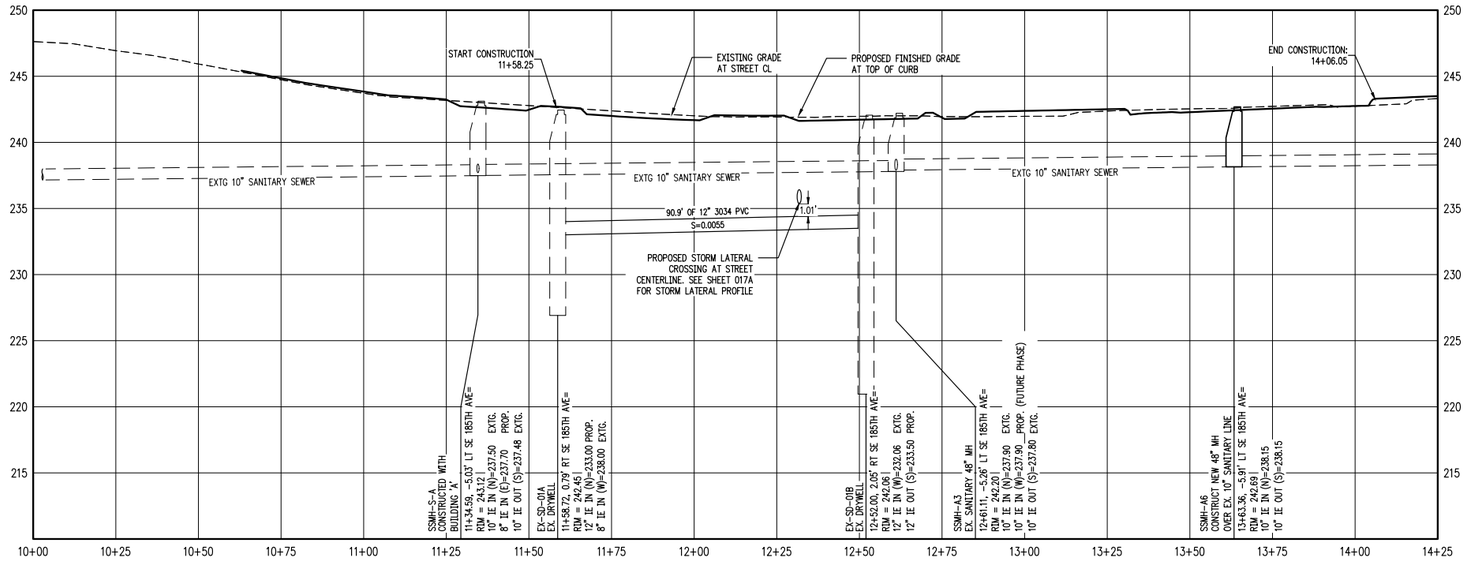

SE 185TH AVE (STA 11+58 TO 14+07) - PROFILE

SCALE: 1"=20' H, 1"=5 V

CATCH BASIN DATA TABLE						
CATCH BASIN	C.B. TYPE	STREET STA	RIM ELEV.	I.E. OUT	SLOPE	PIPE DATA
SDCB-S-12	INSTALL CB PER C.O.G. DETAIL 401A-C	12+20.87 16.23' RT	241.58	235.79	0.0200	53.44 LF 12" 3034 PVC

CONSTRUCTION NOTES:

1. INSTALL MONOLITHIC CURB AND GUTTER PER C.O.G. DETAIL 602, SHT. 012.
2. INSTALL 10.0' SIDEWALK PER C.O.G. DETAIL 624, SHT. 012.
3. INSTALL CURB RETURN DRIVEWAY APPROACH PER C.O.G. DETAIL 623, SHT. 012. CONCRETE DRIVEWAY APRON STRUCTURAL SECTION SHALL CONFORM TO COG DETAIL 622, SHT. 012
4. INSTALL SIDEWALK RAMP PER C.O.G. DETAIL 626, SHT. 012 AND GRADING DETAIL SHT 018.
5. NOT USED.
6. SAW CUT AND TEMPORARY STREET REPLACEMENT. SAW CUT LOCATION WILL BE DETERMINED IN FIELD BY CITY INSPECTOR BASED ON EXISTING PAVEMENT CONDITION.
7. INSTALL STREET TREES PER C.O.G. DETAIL 642, SEE SHT. 013.
8. ROTATE EXISTING MANHOLE CONE AND REALIGN STEPS AS REQUIRED.
9. OVERHEAD POWER AND COMMUNICATION LINES TO BE UNDERGROUND. COORDINATE WITH PGE AND COMMUNICATION COMPANIES. CAREFULLY REMOVE EXISTING MAST ARM LIGHT AND COORDINATE DELIVERY TO C.O.G. UNDERGROUNDING TO INCLUDE LINES CROSSING 185TH WITH RESTORATION AND NEW GUYING
10. INSTALL COMMERCIAL DRIVEWAY APPROACH PER C.O.G. DETAIL 622, SHT. 012.
11. INSTALL SIGNAL COMMUNICATION CONDUIT AND JUNCTION BOX PER C.O.G. DETAIL 651, SHT. 013.
12. CONNECT TO EXISTING SIGNAL BOX. REMOVE AND REPLACE EXISTING SIDEWALK AS NECESSARY.
13. INSTALL 12" 3034 PVC LATERAL AND CATCH BASIN PER DETAIL C.O.G. 401A-C, SHT. 014. CONTRACTOR TO MINIMIZE EXCAVATION AROUND EXISTING WATER MAIN DURING INSTALLATION OF CATCH BASIN. SEE SHEET 017A FOR STORM LATERAL PROFILE AND DETAILS
14. CONTRACTOR TO POTHOLE AND CONFIRM ELEVATION OF EXISTING WATER MAIN AT POTENTIAL CROSSING CONFLICTS. CONTRACTOR TO CONTACT ENGINEER ON RECORD IF PROPOSED STORM PIPE CAN NOT MAINTAIN A 6-INCH CLEARANCE WITH EXISTING WATER MAIN.
15. COORDINATE WITH PGE TO RELOCATE EXISTING POWER POLE.
16. CONTRACTOR TO COORDINATE WITH CITY OF GRESHAM TO INSPECT EXISTING DRYWELL AND REPAIR OR TEST AS NEEDED.
17. ROCKWOOD WATER P.U.D. TO RELOCATE EXISTING FIRE HYDRANT 88.0' TO THE NORTH OFF OF NEW FIRE LINE SYSTEM PER ROCKWOOD WATER PUD DETAIL SD-5, SHT 016
18. NOT USED.
19. ROCKWOOD WATER PUD TO WET TAP EXISTING WATER MAIN.
20. EXISTING 8" CONNECTION TO BE ABANDONED BY ROCKWOOD WATER PUD
21. INSTALL CAST-IN-PLACE 48" FLAT TOP SANITARY SEWER PER C.O.G. DETAIL 301, SHT 014.
22. CONTRACTOR TO COORDINATE WITH CITY OF GRESHAM PUBLIC WORKS INSPECTOR TO FIELD FIT A TEMPORARY CONCRETE CURB AND ACCESSIBLE ROUTE BETWEEN PROPOSED CURB RETURN AND EXISTING SIDEWALK.

GENERAL NOTES:

1. THE CONTRACTOR SHALL FIELD VERIFY THE SIZE, LOCATION & DEPTH OF EXISTING UTILITIES PRIOR TO CONSTRUCTION.
2. ALL ON-SITE TRENCH BACKFILL & PIPE BEDDING PER DETAIL S14, SHT. 011. ALL OFF-SITE TRENCH BACKFILL & PIPE BEDDING PER C.O.G. DETAIL 314, SHT. 012, AND TRENCH RESTORATION PER C.O.G. DETAIL 315, SHT. 015.

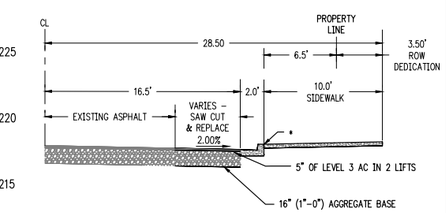

SE 185TH AVE-LOCAL COMMERICAL STREET SECTION

* CONTRACTOR TO COORDINATE FINAL CURB ELEVATION AND CONSTRUCTION DATES WITH CITY STAFF DUE TO ANTICIPATED 185TH LOCAL STREET RECONSTRUCTION CIP PROJECT.

EMERIO Design
6445 SW FALLBROOK PL, SUITE 100
BEAVERTON, OREGON 97008
TEL: (503) 746-8812
FAX: (503) 639-9592
www.emeriodesign.com

DATE	NO.	REVISION	BY
3/16/20	0	1ST DR SET	TEK

REGISTERED PROFESSIONAL ENGINEER 54665 OREGON ERIC DANIEL EVANS
EXPIRES: 12/31/2020

SCALE VERT: HORIZ:
DATE: JUNE 2018
C.O.G. PROJECT #: 072654

SECTION	TWP.	RANGE	LEGAL
1N	3E	32CC	

DESIGNED: TEK
DRAWN: TEK
CHECKED: EDE
APPROVED:
SHEET 017 OF 018

PROJECT NAME: ROCKWOOD RISING SOUTH PUBLIC IMPROVEMENTS

LOCATION: BUILDING C 458 SE 185TH AVE PORTLAND OR, 97233

CITY OF GRESHAM
DEPARTMENT OF ENVIRONMENTAL SERVICES
ENGINEERING DIVISION
1333 NW EASTMAN PARKWAY
GRESHAM, OREGON 97030-3825
(503) 618-2525

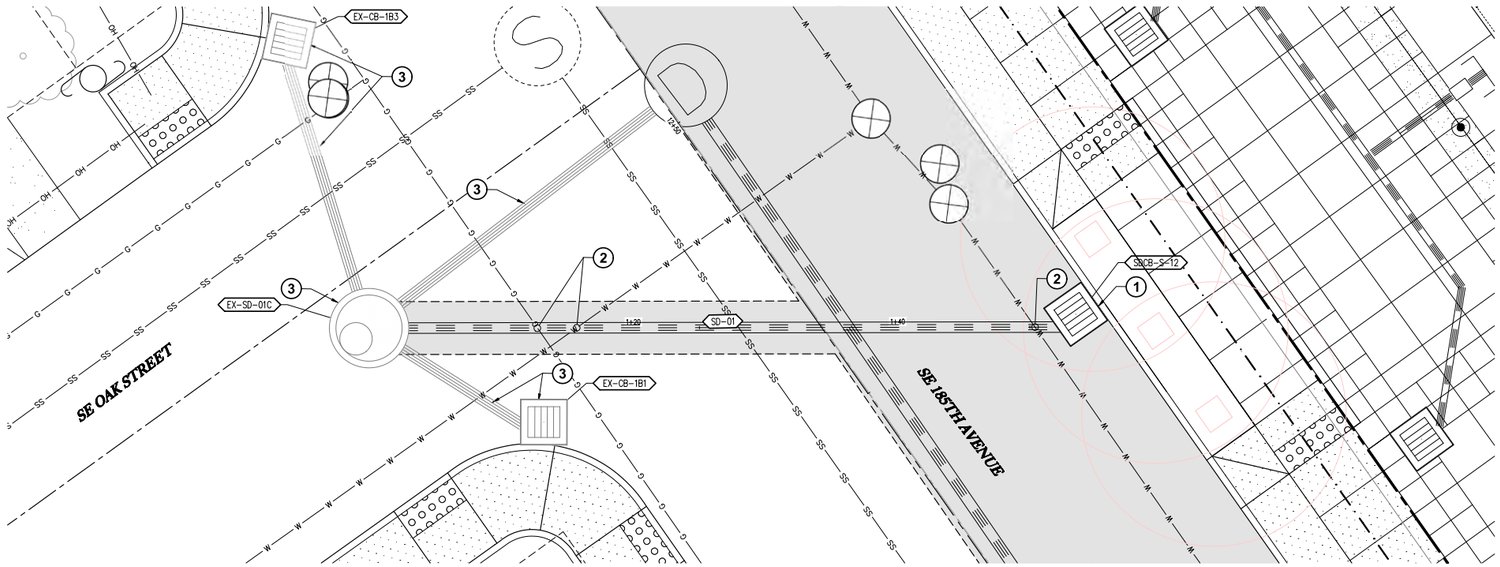

STORM LINE SD-01 - PLAN

SCALE: 1"=5'

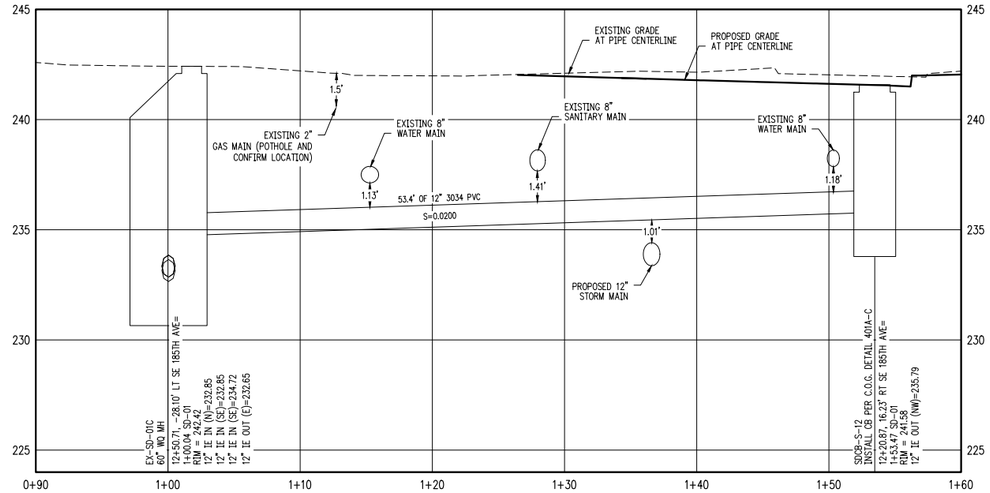

STORM LINE SD-01 - PROFILE

SCALE: 1"=5' H, 1"=3' V

5' 0 2.5' 5' 10'

SCALE: 1" = 5'

CONSTRUCTION NOTES:

1. INSTALL 12" 3034 PVC LATERAL AND CATCH BASIN PER DETAIL C.O.G. 401A-C, SHT. 014. CONTRACTOR TO MINIMIZE EXCAVATION AROUND EXISTING WATER MAIN DURING INSTALLATION OF CATH BASIN.
2. CONTRACTOR TO POTHOLE AND CONFIRM ELEVATION OF EXISTING WATER MAIN AT POTENTIAL CROSSING CONFLICTS. CONTRACTOR TO CONTACT ENGINEER ON RECORD IF PROPOSED STORM LATERAL CAN NOT MAINTAIN A 6-INCH CLEARANCE WITH EXISTING WATER MAIN.
3. STORM SYSTEM INSTALLED UNDER SEPARATE PERMIT.

GENERAL NOTES:

1. THE CONTRACTOR SHALL FIELD VERIFY THE SIZE, LOCATION & DEPTH OF EXISTING UTILITIES PRIOR TO CONSTRUCTION.
2. ALL ON-SITE TRENCH BACKFILL & PIPE BEDDING PER DETAIL S14, SHT. 011. ALL OFF-SITE TRENCH BACKFILL & PIPE BEDDING PER C.O.G. DETAIL 314, SHT. 012, AND TRENCH RESTORATION PER C.O.G. DETAIL 315, SHT. 015.

EX-SD-01C PIPE ROLL OUT

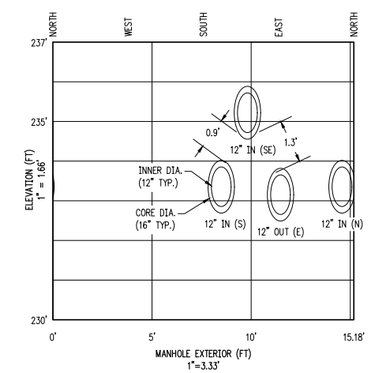

EMERIO Design
6445 SW FALLBROOK PL, SUITE 100
BEAVERTON, OREGON 97008
TEL: (503) 746-8812
FAX: (503) 639-9592
www.emeriodesign.com

DATE	NO.	REVISION	BY
3/16/20	0	1ST DR SET	TEK

DESIGNED: TEK
DRAWN: TEK
CHECKED: EDE
APPROVED:

SHEET 017A OF 018

REGISTERED PROFESSIONAL ENGINEER 54865 — Docusigned by: Eric Evans — ERIC DANIEL EVANS — OREGON — EXPIRES: 12/31/2021

SCALE: VERT: HORIZ:
DATE: JUNE 2018
C.O.G. PROJECT #: 072654
LEGAL
SECTION 1N | TWP. 3E | RANGE 32CC

PROJECT NAME: ROCKWOOD RISING SOUTH PUBLIC IMPROVEMENTS

LOCATION: BUILDING C 458 SE 185TH AVE PORTLAND OR, 97233

CITY OF GRESHAM
DEPARTMENT OF ENVIRONMENTAL SERVICES
ENGINEERING DIVISION
1333 NW EASTMAN PARKWAY
GRESHAM, OREGON 97030-3825
(503) 618-2525

Hook: Bookset Mar 16 2020 - 1:1Plan D:\DTR_ROR Backgrnd Wk\Wk\Building C\DTR_ROR_017A.dwg

CIVIL PUBLIC WORKS - CURB RETURNS

GENERAL NOTES:

A. THE CONTRACTOR SHALL FIELD VERIFY THE SIZE, LOCATION & DEPTH OF EXISTING UTILITIES PRIOR TO CONSTRUCTION.

B. ALL FORMS FOR PUBLIC CURB RAMPS SHALL BE INSPECTED BY CITY INSPECTOR 48 HRS IN ADVANCE OF CONCRETE POUR FOR ADA RAMPS AND APPROACHES

C. INSTALL TRUNCATED DOMES PER C.O.G. DWG 625, SHT 012.

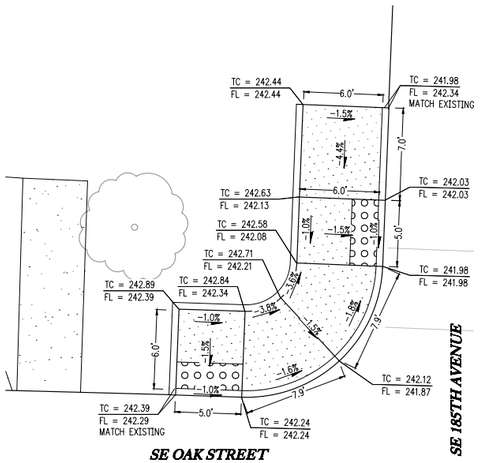

SE 185TH/SE OAK - NW CURB RETURN

SCALE: 1"=5'

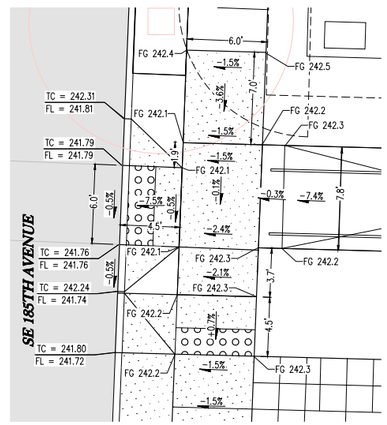

SE 185TH/SE OAK - NE CURB RETURN

SCALE: 1"=5'

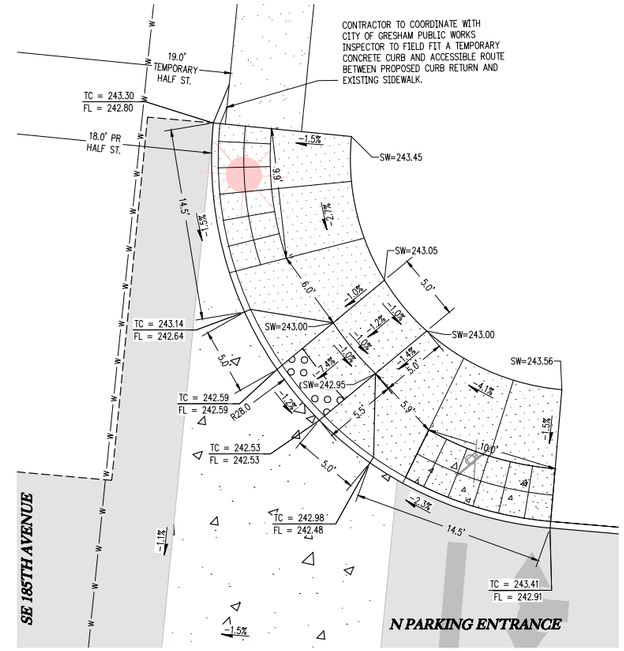

SE 185TH AVE/N PARKING ENTRANCE - NE CURB RETURN

SCALE: 1"=5'

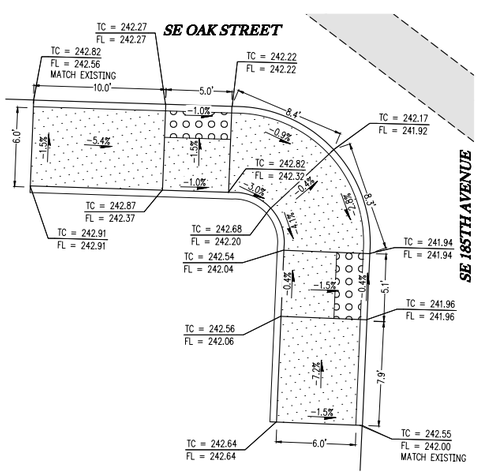

SE 185TH/SE OAK - SW CURB RETURN

SCALE: 1"=5'

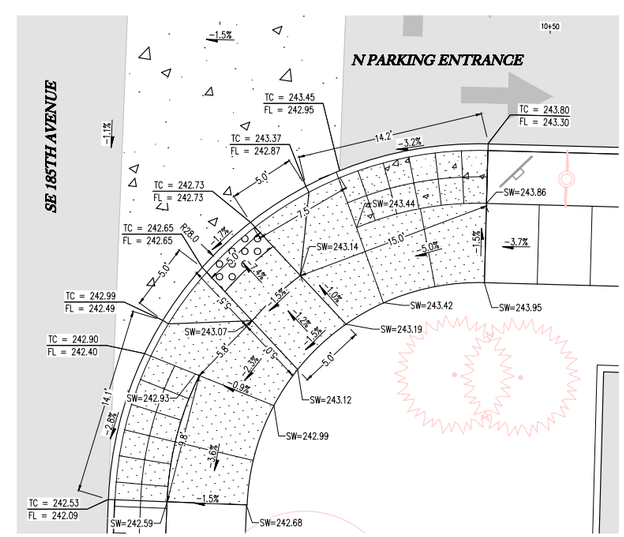

SE 185TH AVE/N PARKING ENTRANCE - SE CURB RETURN

SCALE: 1"=5'

EMERIO Design
6445 SW FALLBROOK PL, SUITE 100
BEAVERTON, OREGON 97008
TEL: (503) 746-8812
FAX: (503) 639-9592
www.emeriodesign.com

DATE	NO.	REVISION	BY
3/16/20	0	1ST DR SET	TEK

REGISTERED PROFESSIONAL ENGINEER 54865 OREGON ERIC DANIEL EVANS EXPIRES: 12/31/2020

DESIGNED:	TEK	SHEET	018 OF 018
DRAWN:	TEK		
CHECKED:	EDE		
APPROVED:			

SCALE	VERT: HORIZ:
DATE:	JUNE 2018
C.O.G. PROJECT #:	072654
LEGAL	
SECTION	TWP.	RANGE
1N	3E	32CC

PROJECT NAME: ROCKWOOD RISING SOUTH PUBLIC IMPROVEMENTS

LOCATION: BUILDING C 458 SE 185TH AVE PORTLAND OR, 97233

CITY OF GRESHAM
DEPARTMENT OF ENVIRONMENTAL SERVICES
ENGINEERING DIVISION
1333 NW EASTMAN PARKWAY
GRESHAM, OREGON 97030-3825
(503) 618-2525