DEVELOPMENT CODE IMPROVEMENT PROJECT – 5: RENEWABLE ENERGY

Technical Appendix

Urban Design & Planning – Comprehensive Planning
December 28, 2011

Lauren McGuire, Senior Landscape Architect

Solar Power

Solar power is the most widely used form of renewable energy. 17,000 households have solar energy systems in Oregon alone.[1] There are two kinds of active solar energy systems for deriving energy from the sun – solar hot water and solar photovoltaic systems. Both typically involve roof mounted panels or collectors. Solar collectors work best on south facing roofs, though east-west oriented roofs may be suitable as well. There are also pole mounted systems for situations where roof slopes and building orientation are not optimal or where there is significant shading by adjacent buildings, etc.

Heating water is one of largest energy consumers in a home. Solar water heating systems can reduce the amount of energy used to heat water in the average home by about 60%, resulting in annual savings of $150 to $300.[2] Cold water from the water service line is pumped up to the roof mounted collector. It is then circulated through the collector where the water is heated by the sun and then drains down to a tank that holds the solar heated water. The water then flows into the hot water tank as needed. A typical solar water heating panel is 4 ft. by 10 ft. Usually one or two collectors are required to meet the above energy savings. A typical residential solar hot water system costs $6,500 to $10,000 before incentives. A diagram of the system is shown below:

[1] The Portland Plan, Energy Background Report.

[2] Solar Oregon website, Solar Water Heating/Typical Costs.

Figure 1: Solar Hot Water System

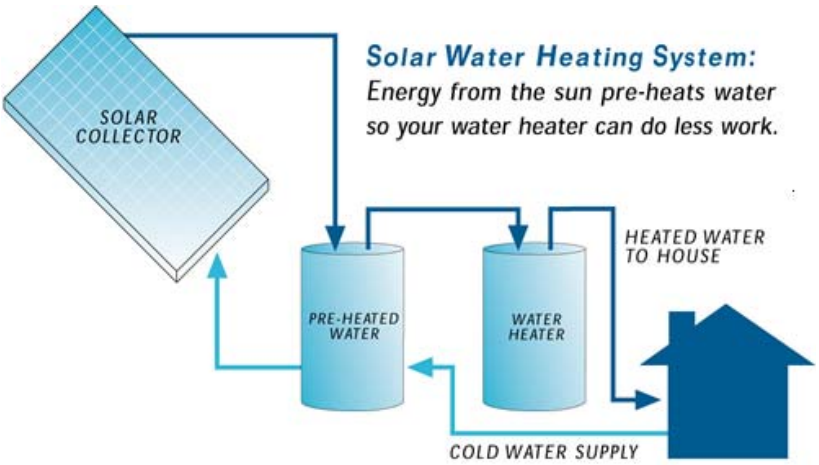

*From: Energy Trust of Oregon

Photovoltaic panels convert sunlight directly into electricity made up of electrons. This is made possible by the material inside the collector, semiconductors usually made of silicon, that can conduct electricity and which is organized into "cells." Electrons in the semiconductor material are energized by sunlight and are driven toward the surface of each cell where they are collected and transmitted elsewhere through wiring. In the U.S., electrical devices and utility grids use electricity in the form of alternating current (AC). Because photovoltaics create direct current (DC), it must first be directed to an inverter box, usually mounted on the side of the house, where it can be converted to alternating current and then synchronized with the utility supplied electricity. From the inverter, it goes to the electrical panel (circuit breaker box) and then goes through the house wiring to wall outlets. For net metering purposes, any surplus power goes to the utility meter where it can be recorded for utility bill deductions and then to the utility grid. A diagram of the system is shown below:

Figure 2: Photovoltaic Panel

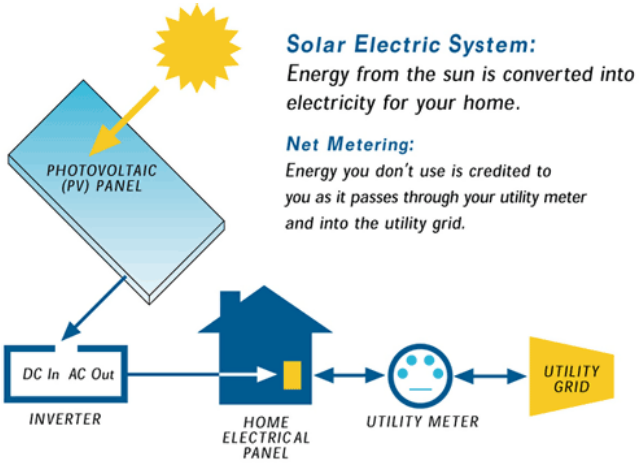

*From: Energy Trust of Oregon

Electricity produced by photovoltaic panels is expressed in watts and kilowatt hours. A watt is a measurement of electricity and a kilowatt hour (kWh) is the amount of electricity that is transmitted at a constant rate of 1,000 watts per hour. A kilowatt hour is the unit that is used by utilities to determine the amount of power used by a home or business for billing purposes.

The average four person household in the Portland area uses about 12,000 kWh annually.[3] In western Oregon, 100 sq. ft. of panel area can generate about 1,000 kWh annually.[4] A typical residential system producing 3,000 kWh, with 300 sq. ft. of panel area, can contribute one quarter to one third of the electricity consumed annually by a four person household depending on the number of sunny days, etc. The cost of such a system is about $21,000 before incentives.[5] Besides residential and commercial uses, photovoltaic panels have been used to power auxiliary uses such as irrigation systems and restrooms. They are also beginning to be used to power charging stations for electric vehicles in cities such as Chicago, New York and Tokyo.

The next technological advance in solar electric is the development of thin plastic-like film that has embedded metal semiconductors which conduct electricity when exposed to sunlight. Power output and cost promises to be superior to current photovoltaic panels. The film can be manufactured by printing it out in large sheets which can then be cut into desired sizes and shapes. This material will be able to be integrated into exterior building materials such as asphalt roofing, vinyl siding and windows so as not to be noticeable. Solexant Corporation, who will be building a plant in Gresham, is an example of a firm that produces thin film solar cells.

Figure 3: Examples of Solar Installations

Residential Solar Roof Panel Installation
From: Solar Power Homes

Residential Solar Wall Panel Installation
From: Solar Power Homes

Residential Solar Roof Panel Installation

[3] PGE website, Renewables & Efficiency, Go Solar.
[4] Oregon Dept. of Energy, "Oregon Solar Electric Guide."
[5] PGE website, Renewables & Efficiency, Costs & Incentives.

Industrial Solar Roof Panel Installation
From: Solar Power Homes

Taiwan Stadium Solar Roof Installation
From: Chic Ecologist

Solar Array Installation along I-5 and I-205 Freeways

Issues to be considered:

Below are the issues to be considered when developing code language for solar energy systems.

- Solar Access Easements. The Code currently allows a person with LDR-5 or LDR-7 property to seek a solar access permit when installing a solar feature on his/her property.[6] The purpose of the permit is to protect solar access to the feature by prohibiting them from being shaded by future vegetation on and off the applicant's site. The application requires the written consent by all property owners who will be burdened by the permit.[7] Development of a solar energy ordinance should revisit this language and the remainder of Appendix 8 to ensure a comprehensive and cohesive approach to solar energy.
- Tree Canopy Conflicts. Another solar access issue is that the granting of solar access easements may conflict with the need in certain areas to preserve existing trees and plant new trees along streets and in habitat restoration areas. Trees may shade solar panels when they reach mature heights. For example, Development Code Section A.4.004B allows a Significant Tree to be removed in order to install solar energy equipment. Whether the City wants to extend this same tree removal right in other kinds of trees is problematic.

[6] See GCDC Section A.8001.
[7] See GCDC Section A8.004.F.

- Floor Area Ratio. If solar access easements are permitted in centers (Downtown, Civic and Rockwood) conflicts may arise with minimum FARs and building height requirements and the City's desire to have high density development in these areas. Solar access easements need to be limited to some extent in centers in order to achieve redevelopment goals.
- Visual Impact. Solar panels will be visible where they are mounted and may cause some glare from the materials used in their construction. While the City requires screening of roof mounted building equipment in some districts, it doesn't explicitly address screening of solar panels. Analysis of this factor should look at the benefits of screening for reducing visual impact and the detriments of screening on the efficiency of energy generation. Other visual impacts can occur when roof mounted solar panels extend beyond the roof perimeter (edge) and where ground mounted panels are mounted on top of poles to avoid shading by buildings or vegetation.
- Location and Mounting. Solar panels are typically affixed to a roof or are ground mounted. For those that are affixed to a roof, they need to be affixed at an angle optimal for generating energy. Given the thickness of a solar panel, this means that a roof mounted solar panel may extend higher than the maximum height. For solar panels that are ground mounted, code language must consider if they are allowed to encroach into required yard setbacks.
- Solar HB 3516. This new State law requires that solar panels be an allowed use for residential and commercial structures if they do not increase the structure's footprint, do not exceed the roof height, and the panels are parallel to the roof slope and not more than 18" off the roof. Standards cannot be created that require extensive site surveys or restrictions.

Wind Turbines

Wind energy is a converted form of solar energy. The sun's radiation heats the earth at different rates which causes portions of the atmosphere to warm differently. The result is wind.

When air is in motion it contains kinetic energy. Wind turbines convert that kinetic wind energy into mechanical force. Wind turbines are electric generators that utilize the mechanical force to produce clean power. It is the second most widely used type of renewable energy. Although wind power accounts for only 1.5% of world wide electricity production, it is growing rapidly, having more than doubled production since 2005.[8] In Denmark it accounts for 19% of electricity production.[9] Locally, PGE derives 4% of its electricity from wind turbines.[10]

A wind turbine works by having the wind turn its blades or rotor which spins a shaft which connects to a generator that makes electricity. The higher and more constant the wind speed the more electricity is produced, up to the maximum output of the turbine.

[8] Wikiepedia.org.
[9] Ibid.
[10] PGE website, "How We Generate Energy."

Wind turbines need to be attached atop a pole, tower or building for support and to access the wind. Since wind speeds increase with height, the higher the turbine is mounted, the higher its efficiency. In general, the larger the rotor, the larger is the amount of wind caught and electricity produced. Wind speed can be highly variable, especially in urban environments where buildings and other structures can deflect wind. Like photovoltaic panels, power production is measured in watts and kilowatt hours (kWh). An inverter is necessary to convert direct current into alternating current, which is usually part of the turbine.

Wind turbines come in two scales:

- Large turbines: These are used mainly by utilities in wind farms and transmit electricity into the power grid. They consist of dozens and sometimes hundreds of very large turbines that can generate up to several megawatts (million watts) each. Such farms can occupy hundreds of acres or square miles. They are typically located in wind swept plains, deserts, mountain passes and along seashores where there is a near constant high wind speed.

  An example of a wind farm is PGE's Biglow Canyon Wind Farm in eastern Oregon (Sherman County). When completed, it will consist of 217 wind turbines that will generate 450 megawatts or enough electricity to power 125,000 homes. Each turbine weighs at least 246 tons, has a 300 ft. diameter rotor and is mounted on a 400 ft. high tower. [11]

- Small turbines: These are wind turbines designed for individual residential or commercial applications where most of the power will be consumed on-site. They generate less than 100 kilowatts.[12] Most home systems generate between 1 and 10 kilowatts.[13] They typically have tower heights of 60 to 100 ft. and rotors up to 20 ft. in diameter. In recent years, small turbine systems have been developed that use vertically oriented rotors and generators rather than conventional horizontally oriented systems using rotor blades. The rotor used to capture the wind is a cylinder shaped device that is narrower than a blade type rotor. Turbines made by Helix Wind and Oregon Wind are examples. (see Figure 3)

  According to the Oregon Department of Energy and Energy Trust of Oregon, most residential wind turbines typically have an electrical output between 1 and 10 kW. One popular turbine is the Skystream 3.7. Its peak power output of 2.7 kW and 800 kWh per month is generated at a wind speed of 22 mph. The average wind speed in Gresham is between 9 and 10 mph in most areas.[14] At an average wind speed of 10 mph, the Skystream would produce 250 kWh per month or 3,000 kWh annually. This equates to 27% of the electricity consumed annually by the average household in the PGE service area.

[11] Ibid, Community & Environment, Biglow Wind Farm.
[12] U.S. Dept of Energy website, Wind Energy Basics.
[13] AWEA, "In the Public Interest: How and Why to Permit for Small Wind Systems."
[14] Energy Trust of Oregon website, Wind Speed Map.

The systems can have a battery back-up system to store the generated energy or a grid-tie which sends energy back to the energy grid for credit on future energy bills.

Figure 4: Examples of Wind Turbines

Wind Farm Installation
*From: Wikipedia

Residential Wind Turbine Installation
*From: Southwest Wind Power

Vertical Wind Turbine
*From: Helix Wind

Revolution (Helyx)
Vertical Wind Turbine
*From: Oregon Wind

Vertical Wind Turbine
*From: Quiet Revolution

Residential Wind Turbine
*From: Swift/Cascade Renewable Energy

Vertical Wind Turbine
*From: Skyron

Issues to be considered:

Below are the issues to consider when developing code language for wind energy.

- Visual Impact. In order to operate with the greatest efficiency, wind energy devices need to be located high enough to capture sufficient wind. This means that the pole and turbine are above the height of buildings and trees. In many instances, this may be a pole approximately 60-80 ft. tall with blades, up to 20 ft. long, adding to the overall height. The color of a wind turbine should be a non-reflective neutral color that will blend into the sky, for example being painted a flat grey color instead of a bright orange. From the street, roof mounted wind turbines can have more of a visual impact than a pole mounted turbine because the blades are closer to the ground and eye level. Other issues that can have a greater visual impact are having more than one wind turbine on a property, having attached lights (rarely required by the FAA), having the turbine mounted on a rectangular tower instead of on a single pole, and having exterior electrical feeder lines attached to the building wall instead of being buried underground.
- Safety. Having a sufficient setback from the turbine to adjacent property lines and structures provides a safety zone in the event the structure collapses. The American Wind Energy Association (AWEA), the wind industry trade association, recommends that jurisdictions require a setback from the property line or adjacent structures that at least equals the height of the pole (or tower) plus the length of a turbine blade. A structural analysis of the turbine and foundation by a licensed engineer, usually provided by the manufacturer, should be required as part of permitting to ensure structural integrity. Energy Trust of Oregon staff recommends requiring a structural analysis for roofs where a roof mounted turbine will be attached.[15]

[15] Conversation with Erin Johnston, Energy Trust of Oregon, June 10, 2010.

- Noise. Turbines generate sound as they capture the wind. This noise, and the repetitive nature of this noise, may have an impact in the immediate area even if the level of noise is below the standards set forth in the Gresham Revised Code.[16] In general, the smaller residential wind turbines produce much less noise than the much larger turbines used in wind turbine farms. Urban background noise (people, traffic, airplanes, etc.) can often mask the low noise level that small scale systems make at higher wind speeds.
- Environmental Concerns- Wildlife. Turbines may have an impact on wildlife - birds, bats, and other animals that live in urban areas. The turbines may protrude into areas where birds and bats fly and prompt collision. This is much more of an issue for the larger wind farm turbines rather than for the smaller home scale systems.[17] Currently there is a requirement to map and avoid wind turbine placement in bird migratory pathways.
- Abandonment. There is a possibility that a wind turbine may be abandoned and not maintained. This may add visual clutter and in extreme cases pose a hazard to neighbors. In order to prevent this situation, some jurisdictions require removal of abandoned turbines after a certain time period. The AWEA recommends that a wind turbine be removed if inoperable for more than 6 months.

Biomass Energy

Biomass energy technologies utilize the solar energy that is stored as carbohydrates in plant materials. Biomass is a renewable energy source because the growth of new plants replenishes the supply. Three percent of all energy produced in the nation is derived from biomass.[18] This renewable energy source is typically done on a large scale on farms or by utilities or industry, not in a residential setting.

Ideally, the use of biomass for energy causes no net increase in carbon dioxide emissions to the atmosphere. As plants grow they use carbon dioxide to make carbohydrates. If the amount of new biomass growth is equal to the amount used for energy, it is “carbon neutral.” That is, the use of biomass does not increase carbon dioxide emissions and does not contribute to global climate change. In addition, the use of biomass is often a way to dispose of waste material that would otherwise create environmental pollution.

Plant material or organic waste (e.g. manure) derived from plant material is the source of all biomass fuel. Some biomass fuel is the waste products left after plant materials have been used for other purposes or consumed by animals. Other biomass fuel is plant material harvested for their energy value (e.g. poplar trees). Oregon biomass sources include wood, agricultural crop residue and organic waste.

The following technologies use biomass:

---

[16] GRC 7.20.040.

[17] Conversation with Erin Johnston, Energy Trust of Oregon, June 16, 2010.

[18] Oregon Dept. of Energy website, “An Overview of Biomass Energy.”

- Direct Combustion: Wood, agricultural waste, municipal solid waste and residential fuels (wood pellets, logs) are burned in boilers, stoves, etc. to create radiant heat or to heat water. Industrial/utility applications often use the hot water to produce steam. The steam can then be used for heating buildings, industrial processes or directed to a steam generator to produce electricity.
- Biogas Production: Wastewater treatment plant sludge, animal manure, and food waste is used to produce methane gas or other combustible gas by allowing bacteria to decompose the material in a digester under anaerobic (no oxygen) conditions. It can be burned in boilers to produce hot water for space heating or directed to a gas generator to produce electricity. Methane gas emitted from landfills and sewage treatment plants can also be captured and used for these purposes. For example, Gresham's wastewater treatment plant captures methane gas from sewage which is then piped to a cogenerator. This provides about 50% of the electricity needs of the plant.
- Biofuels Production: Plant material, such as corn or soybeans, is fermented in tanks where bacteria convert the sugars in the carbohydrates into alcohol (ethanol or methanol). Also, diesel fuel can be produced by heating oilseed crops and pressing the oil out or by converting vegetable oils or animal fats. Larger quantities can be produced in a distillation process using chemical solvents.

Figure 5: Examples of Biomass Plants

Direct Combustion System Furnace
From: A-Maizing Heat Furnace

Biogas/Methane Production Facility

Biomass Plant
From: Gestamp

Issues to be considered:

Below are the issues to consider when developing code language for biomass technologies.

- <u>Odor</u>. Since biomass energy converts waste products to methane, odors can permeate the area around the biomass facility. The initial transfer of waste to the biomass site and the breakdown of waste may be done in such a way that odors occur, particularly if outdoor storage is part of the proposed use. As alternatives are developed regarding biomass, the mitigation of odor should be considered.

- Noise. The biomass processes are essentially industrial in nature and can generate offensive noises.
- Combustion. Air quality can be impacted when burning wood or other organic waste. Meeting applicable Oregon DEQ air quality standards and having necessary emission controls should be required.
- Environmental Concerns - Groundwater and Soil Pollution. The amassing of waste products to convert to energy – if handled without care – may cause groundwater and soil pollution. Biofuels production that involves the use of chemical solvents increases this risk. As alternatives are developed regarding biomass, the mitigation of such pollution should be considered.

Geothermal Energy

Geothermal energy is generated from heat stored in the earth. Geothermal resources range from the modest but constant heat (50-70 degrees) generated at shallow depths in the ground that is found nearly everywhere to the extreme heat generated by hot water and steam found at much greater depths in certain areas, such as southern and central Oregon, where hot subterranean rock layers can be found. Multnomah County has minor low temperature (approx. 70 degrees) geothermal resources.[19]

Geothermal energy is utilized in two ways:

- High Temperature Geothermal: Hot water and steam is utilized directly for space heating or to generate electricity. For example, Klamath Falls established a heating district in 1981 that uses geothermal hot water to heat roads/sidewalks, homes, businesses, schools, etc. in and near its downtown.

  Geothermal steam can be used to produce electricity. California has the largest concentration of geothermal electric plants in the world. The Geysers, north of San Francisco, has 22 power plants that use geothermal steam to produce electricity. There are none in Oregon.
- Low Temperature Geothermal: This approach utilizes the natural condition of soil and groundwater at shallow depths that have a constant mild temperature throughout the year. Ground source heat pumps are used to provide interior space/hot water heating, cooling and humidity control. A ground source heat pump transfers heat stored in the earth or in groundwater into a building during the winter and transfers heat out of a building and into the ground during summer. Air or water is used as the heat transfer mechanism with the ground.

  A ground source heat pump has two main parts:

  - Either a closed-loop or open-loop system in the ground where the heat transfer occurs with the soil or groundwater.

[19] The Portland Plan, Energy Background Report.

A closed-loop system typically has two loops in the ground side: the primary refrigerant loop in the applicant cabinet where it exchanges heat with the secondary polyethylene pipe loop of water/anti-freeze mix underground.

An open loop system (also called a groundwater heat pump) has a secondary loop that pumps natural water from a well or a water body into a heat exchanger inside the heat pump. Heat is either extracted or added by the primary refrigerant loop and the water is returned to a separate injection well, irrigation trench, tile field or body of water.

- A ground-source heat pump, similar to an air conditioner, moves heat from or to the earth. The heat pump uses refrigerant in a closed loop system indoors to exchange heat with the water that is pumped from the ground. Heat is then transferred from the refrigerant pipes to the interior air ducts or plumbing system.

A local Portland example of a building using a ground source heat pump is the Burnside Rocket, a 16,000 sq .ft. mixed-use building in east Portland that has office and retail tenants. It utilizes a groundwater heat pump/well system to reduce energy consumption by 40% compared to a conventional HVAC system. It helped the project attain LEED Platinum certification.[20]

Figure 6: Geothermal Energy Systems

Geothermal Heating Furnace System

Geothermal Plant

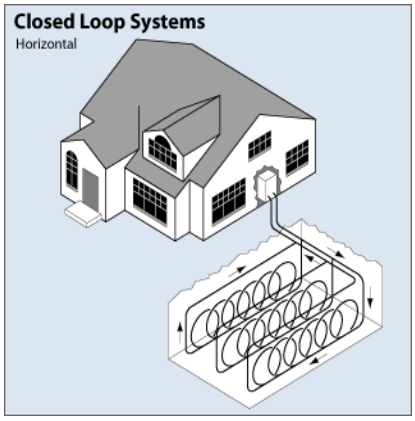

[20] Energy Trust of Oregon website, Business: HVAC/Geothermal.

Geothermal Electric Plant, Geysers CA.
*From: Wikipedia

Issues to be considered:

Below are the issues to consider when developing code language for ground source heat pumps.

- Visual Impact. Although a ground source heat pump can be located inside, one located outside may have visual impacts similar to an exterior air conditioner unit or a heat pump. A closed loop system could disturb a large area of earth, requiring revegetation and erosion control. Some systems may involve having a box for the inlet/outlet pipes attached to an outside wall.
- Safety. To avoid safety issues such as pipe breakage, electrocution, fire, etc., a certified geothermal technician should install the system.
- Environmental Concerns. Open loop systems can contribute to aquifer depletion, water shortages, groundwater and well contamination and subsidence of soils.

Micro-hydro Power

There is some opportunity for development of hydropower energy sources within Gresham. Although damming streams or the Columbia River likely would cause environmental concerns, there is opportunity for micro-hydro power in the streams and even in piping. Micro-hydro energy is energy derived from small power installations producing up to 100kW of electricity. The energy is generated from moving water feeding into a turbine which then turns and generates energy. The water is then directed back into the stream with relatively little impact on the surrounding ecology.

Micro-hydro power is an efficient, low cost energy source as it requires a small amount of flow (as little as two gallons per minute) or a drop as low as two feet to generate electricity. Electricity can be delivered as far as a mile away to the location where it is being used. It is a reliable electricity source during the peak winter energy season when large quantities of electricity are required.

There are two main types of micro-hydro systems:

- In-Stream. This micro-hydro system places a turbine in a flowing stream to generate energy/electricity.
- In-Outfall Pipe. This micro-hydro system places a turbine within the storm water pipe and generates energy/electricity as water flows past it.

The City of Gresham's wastewater treatment plant is investigating the installation of a mini-hydropower facility at the plant's outfall into the Columbia River.

Figure 7: Micro-hydro Energy Systems

In-stream Micro-hydro System

In-Outfall Pipe System

Issues to be considered:

The issues to be considered when implementing micro-hydro power are as follows:

- Visual Impact. If the turbine is set into the center of the flowing stream, there could be undesirable visual impacts. This technology can also be applied within piping where there would be no visual impact.
- Environmental Concerns. The small scale micro-hydropower system has a minimal environmental impact on the local ecosystem. However, stream water will be diverted away from a portion of the stream, and proper caution must be exercised to ensure there will be no damaging impact to fish or the local ecology.

Electric Vehicle Charging Stations

Major automotive manufactures have been developing plug-in electric vehicles which will change the future of transportation with a shift toward cleaner, more energy efficient vehicles.
The motor vehicles incorporate a battery energy storage device with the ability to connect to the electrical grid for the supply of some or all of its fuel energy requirements.

There are two main electric vehicle configurations:

- Battery Electric Vehicle (BEV). Battery Electric Vehicles (BEVs) are powered 100% by the battery energy storage system available on-board the vehicle. The BEV is refueled by connection to the electrical grid through a charging station. Most BEVs can also recapture some of the energy storage utilized through “regenerative breaking” which converts the propulsion motor into a generator when breaking. When regenerative breaking is applied, BEVs can typically recover 5 to 15 percent of the energy used to propel the vehicle to the vehicle speed prior to breaking. BEV batteries are typically larger than batteries in hybrid electric vehicles. The Nissan LEAF is an example of a BEV.

  Figure 8: Battery Electric Vehicle

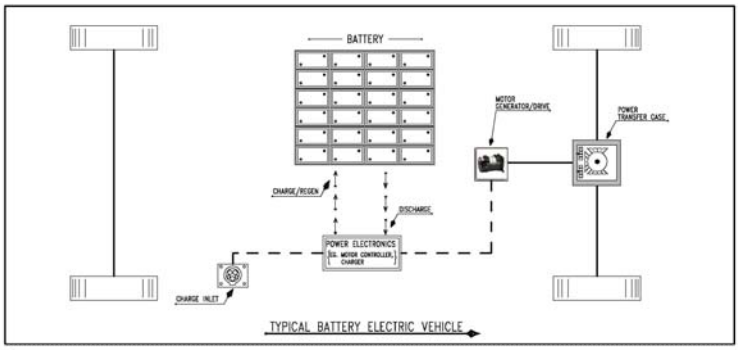

Battery Electric Vehicle
*From: Oregon EV Infrastructure Guidelines Jan 2010 ver 1-0

- Plug-in Hybrid Electric Vehicle (PHEV). PHEVs are powered by two energy sources, a battery and an internal combustion engine (ICE) powered by either gasoline or diesel. Within the PHEV family, there are two main design configurations, a Series Hybrid and a Parallel Hybrid. The Series Hybrid vehicle is propelled solely by the electric drive system, whereas the Parallel Hybrid vehicle is propelled by both the internal combustion engine and the electric drive system. As with a BEV, a Series Hybrid will typically require a larger and more powerful battery than a Parallel Hybrid vehicle in order to meet the performance requirements of the vehicle solely based on battery power.

Figure 9: Plug-in Hybrid Electric Vehicles

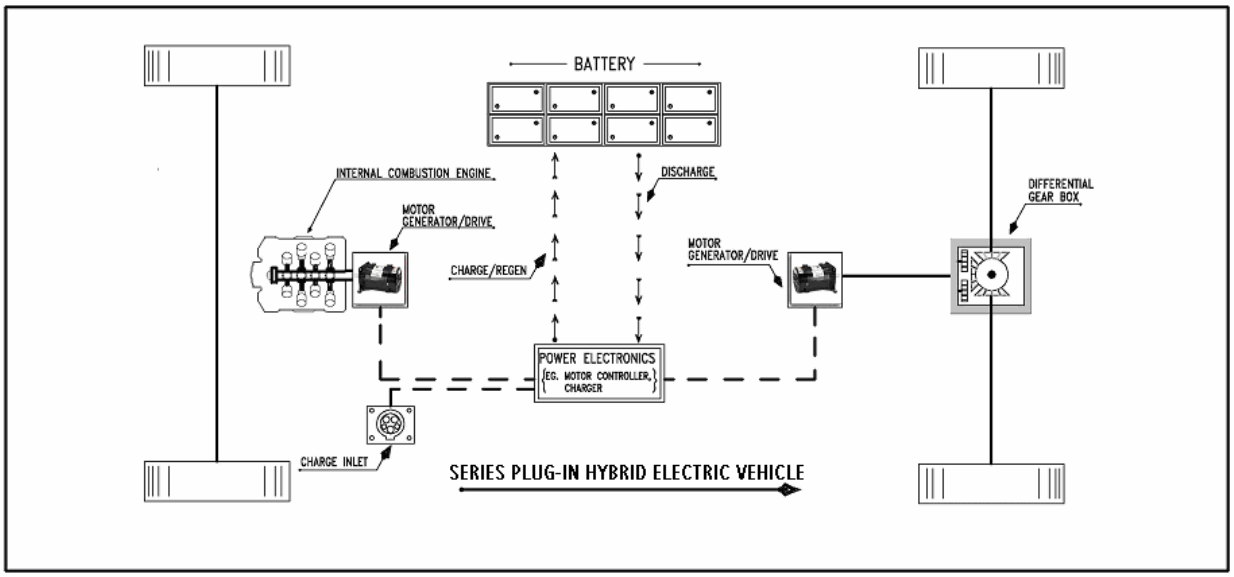

Series Plug-In Hybrid Vehicle Block Diagram

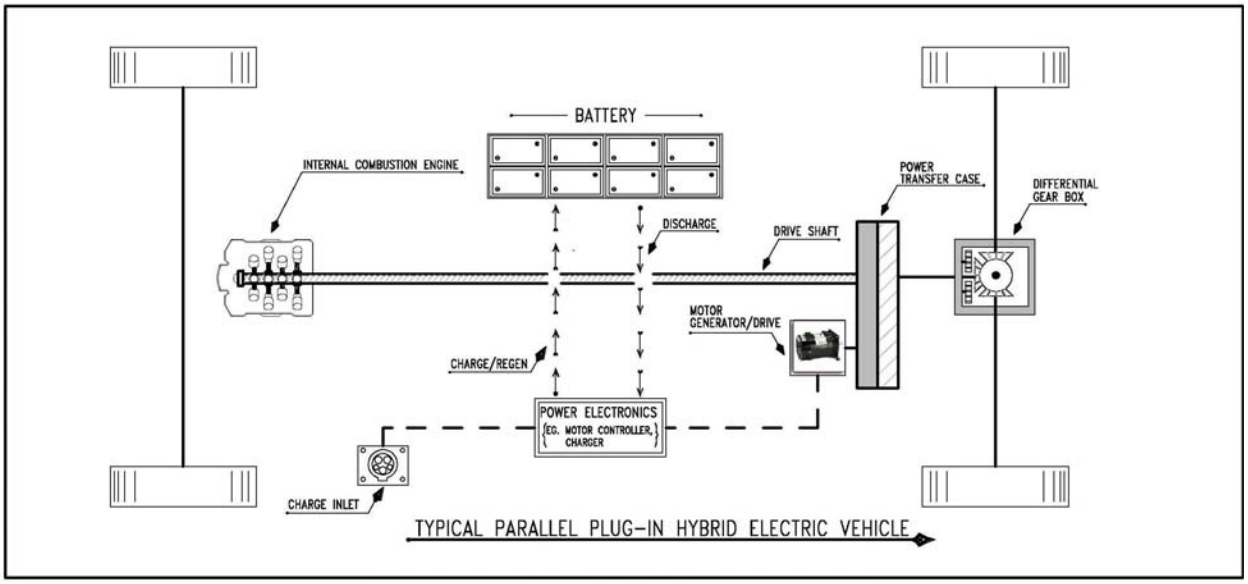

Parallel Plug-In Hybrid Vehicle Block Diagram

Manufacturers of PHEVs use different strategies in combining the battery and ICE and may utilize the battery only for the first several miles with the ICE providing generating power for the duration of the vehicle range (Chevy Volt for example). Others may use the battery power for sustaining motion and the ICE for acceleration or higher energy demands at highway speeds. Frequently, the vehicles employing the former strategy gain a designation such as PHEV-20 to indicate that the first 20 miles are battery only.

Electric Vehicle Categories

EVs can be broken down into the following categories:

- On-Road Highway Speed Vehicles. Vehicles that can drive on all public roads and highways.
- City Electric Vehicles. Vehicles whose top speed is 55 mph.
- Neighborhood Electric Vehicles. Low speed vehicles which are limited to 35 mph or less typically.
- Commercial On-road Highway Speed Vehicles. These vehicles include commercial electric trucks and buses.

The focus of the Development Code will be on the first and last category.

Batteries

Battery Technology

Recent advancements in battery technologies will allow EVs to compete with ICE vehicles in performance, convenience and cost. Most major electric car companies utilize Nickel-Metal-Hydride or Lithium batteries for their EVs. The materials for Lithium based batteries are generally considered abundant, non-hazardous and lower cost than Nickel based batteries. The current challenge with lithium-based technologies is increasing battery capacity while maintaining quality, cycle life and lowering production costs. As battery costs decrease over time, the auto companies will increase the size of the lithium based battery packs and thus the range of electric vehicles.

Relative Battery Capacity

Battery size or capacity is measured in kilowatt hours (kWh). Battery capacity for electric vehicles will range from as little as 3 kWh to as large as 40 kWh or more. Typically, PHEVs will have smaller battery packs because they have more than one fuel source. BEVs rely completely on the storage from their battery pack for both range and acceleration and therefore require a much larger battery pack than a PHEV for the same size vehicle.

Battery Charging Time

Battery electric vehicles depend upon charging equipment placed at homes, employment centers, and in public. The amount of time to fully charge an EV battery is a function of the battery size and the amount of electric power or kilowatts (kW) that an electrical circuit can deliver to the battery.

The charging times for battery electric vehicles ranges from 55 minutes at 440 volts AC current to 31 hours 50 minutes for 110 volt AC current. The common 110-120 volts AC, 15 amp circuits will deliver at minimum 1.1 kW to a battery. A 220-240 volt AC, 40 amp circuit (like the household dryers and ovens circuits) will deliver at minimum 6 kW to a battery. The charging times for plug-in hybrid vehicles range from 17 minutes at 440 volts AC current to 14 hours 30 minutes for 110 volt AC current.

This technology is changing at a rapid rate and times are being reduced significantly.[21] Most vehicles will recharge at a fast charger in ½ hour or less in the future. EV

[21] Ecotality Company, "Electric Vehicle Charging Infrastructure Deployment Guidelines for The Oregon I-5 Metro Areas of Portland, Salem, Corvallis and Eugene," Jan. 2010.

operators will seek fast chargers when they need a charge that could not be accomplished while doing other activities. The stations could generate additional local traffic. Fast chargers operate at high voltage (for example, 480 volts) and/or high amperage and many potential locations do not have adequate capacity (or funds) for installation. Few EV manufacturers currently utilize fast charging; hardware standards are lacking. But infrastructure planners should provide site locations and electrical capacity for this technology.

Electric vehicle charging station companies are already scrambling for the best locations to set up networks and provide services to electric car owners – so how much publicly funded effort should go into planning infrastructure? Public dollars can help facilitate initial stages of the EV rollout through policy and planning documents, ordinances, and permit streamlining. Public agencies can also fund socially beneficial actions without duplicating private efforts. [22]

Figure 10: Electric Vehicle Charging Stations

Single Electric Vehicle Charging Station in Parking Lot

Single Electric Vehicle Charging Station on Street

Multiple Outlet Electric Vehicles Charging Station

Issues to be considered:

The issues to be considered when regulating vehicle charging stations include:

- Scale. There are potentially two scales of charging stations:
  - The Single Charging Station for individual vehicles

[22] David Mayfield, "Electric Vehicles, Oregon Style, Oregon Planners' Journal," November/December 2011.

— The Multiple Outlet Charging Station that functions more like a gas station

- Parking Lot Locations. Typically the stations are currently being installed adjacent to handicap spaces so that they can accommodate electric vans as well as cars. This can be problematic depending on the configuration of the parking lot.
- Street locations. Some municipalities permit electric vehicle charging stations on the street adjacent to parallel or angled on-street parking spaces. This can take valuable on-street parking spaces for an extended period of time. Additionally, there can be conflicts with the right-side vehicle plug locations and on-coming traffic.
- Time Limitations. The time required to fully charge a vehicle can range from a few minutes to several hours depending on the type of charging station. A long term shopper and electric vehicle owner may occupy an electric vehicle station space for longer than necessary.
- Minimum and Maximum Parking Count Requirements. The question of whether to permit electric vehicle parking spaces to count toward the minimum and exceed the maximum parking count needs to be addressed.
- Infrastructure. Trenching and wiring to connect charging stations with existing infrastructure is commonly more expensive than the cost of the charging station itself so facilitating the implementation of the electric vehicle charging infrastructure should be considered.